Understanding the Benefits of SCSI for Linux on z Systems

#SHAREorg

SHARE is an independent volunteer-run information technology association that provides education, professional networking and industry influence.

Agenda

- Storage device attributes
- Ease of administration
- Flexibility of FBA devices
- Solutions and innovation with SCSI fiber channel protocol

Please Note…

- Not recommending one technology over another, the focus is on the benefits.

- In the end, the technology is there, it is your decision on how to leverage it!

Common Disk Attachment Options

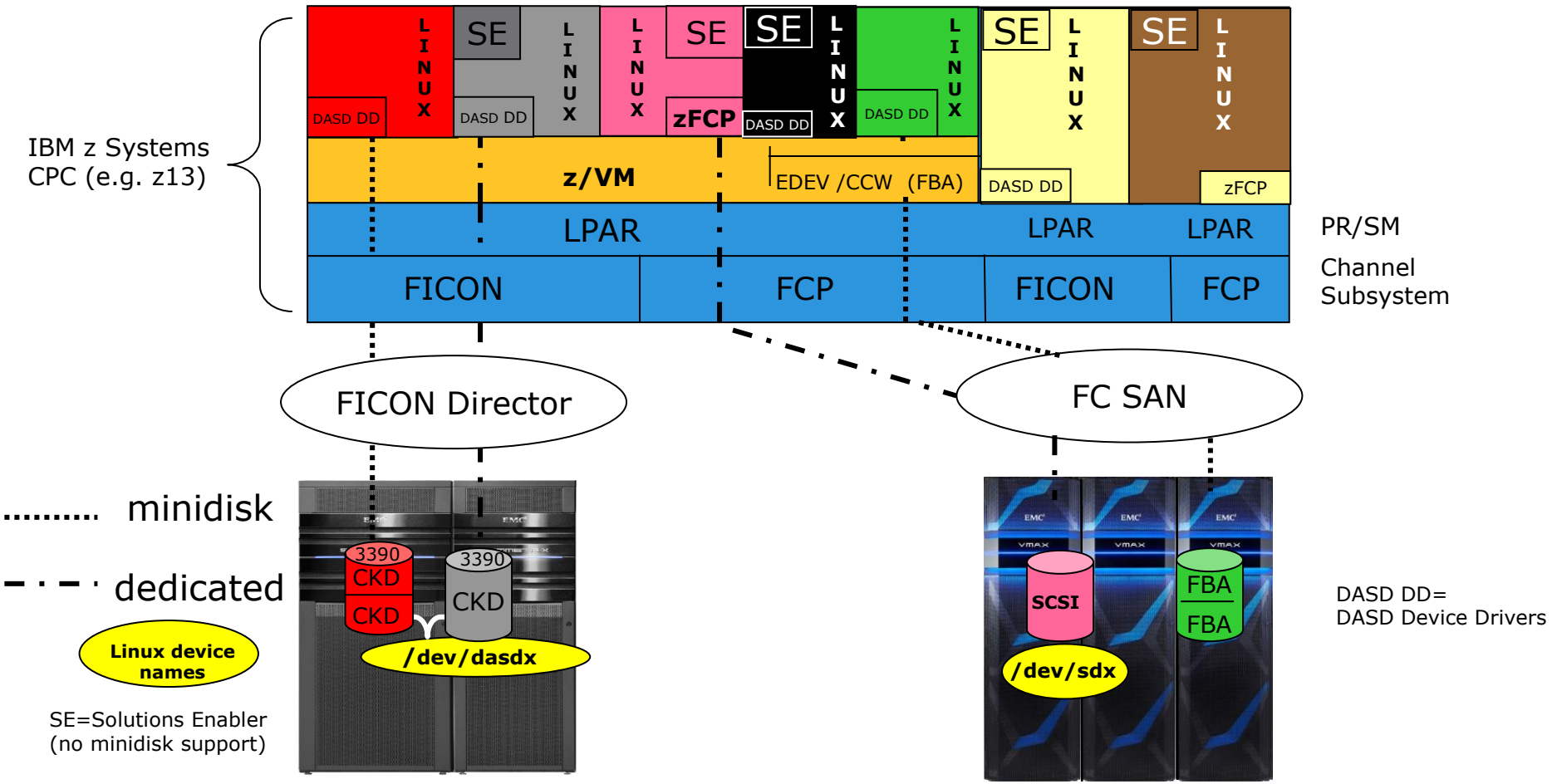

Fixed Block Architecture Device Basics

- FBA devices are fixed byte block (512 bytes)
- FBA device size limited by Linux kernel definition
  - Current limitation 2TB maximum
  - Variable device size
- Best use of physical device space

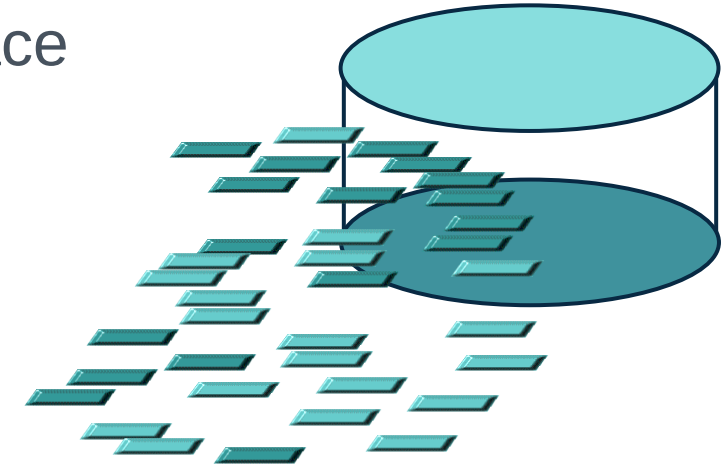

FBA as SCSI LUN devices

- Provision new FBA devices on storage array
- Dynamic LUN allocation to Linux
- Same protocol as used in open systems environment
- Multipath is handled by Linux on z Systems
  - Hardware independence
- Many databases utilize SCSI LUN devices
- Ability to exploit open systems features
  - e.g. – DB2 – the *no filesystem caching* option is supported for SCSI LUNs

Ease of Administration

- No format is required on a SCSI LUN
- No IOCDS change required
  - Except when NPIV is used, additional configuration needed
- No additional z/VM changes needed to provision additional SCSI LUNs to a Linux host
  - No directory changes, no additional mdisks
- Utilizes existing SAN infrastructure

Existing Infrastructure

- Use of existing SAN infrastructure used by open systems
- Use of existing FICON components
  - FICON Express cards
  - FC switches and cabling

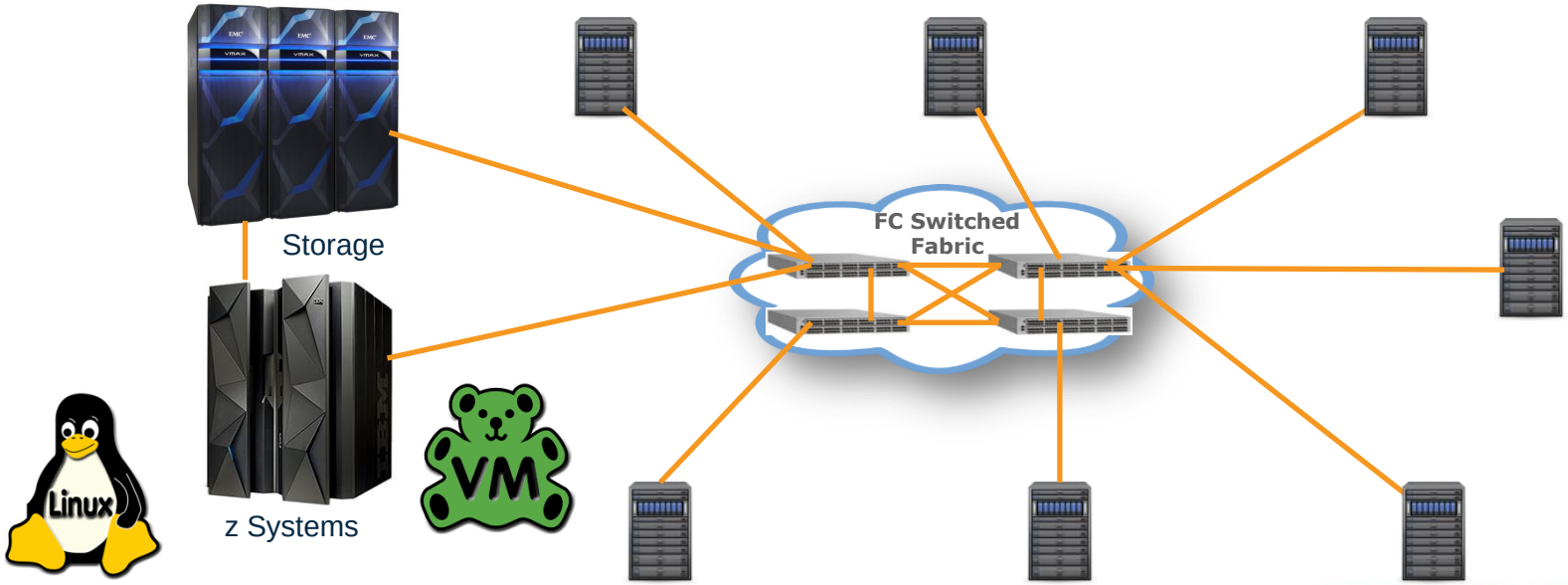

Flexibility

- FBA devices
  - Defined as SCSI LUN to Linux
  - Defined as a emulated device (edev, 9336) to z/VM
- Both communicate to the storage array in SCSI fibre channel protocol
- SCSI *LUN*, or **logical unit number**
  - Number used to identify a **logical unit**, which is a device addressed by the SCSI protocol or protocols which encapsulate SCSI, such as Fibre Channel

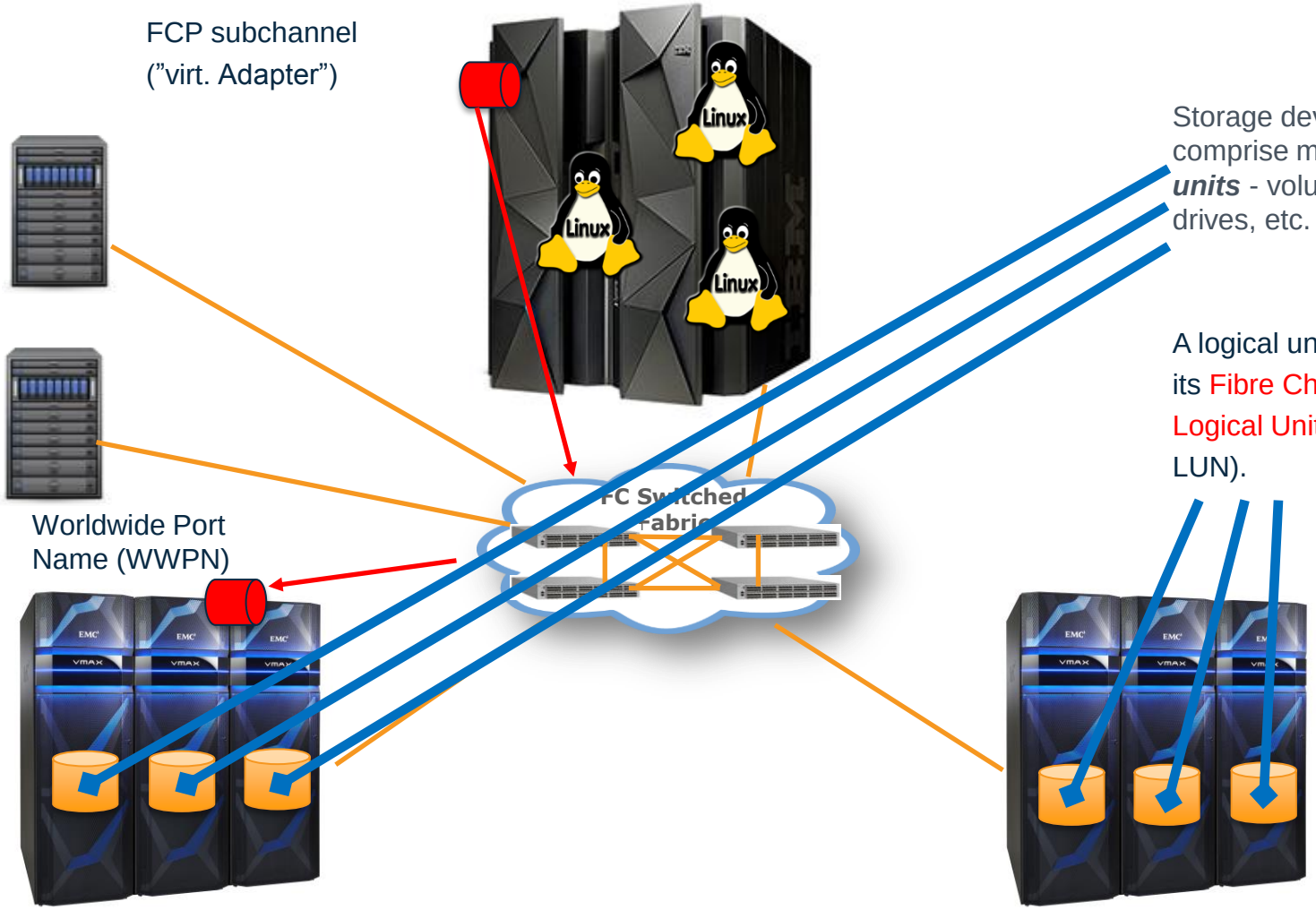
FCP subchannel
("virt. Adapter")
Linux
Linux
Linux
Storage devices usually comprise many ***logical units*** - volumes, tape drives, etc.
A logical unit is identified by its Fibre Channel Protocol Logical Unit Number (FCP LUN).
FC Switched Fabric
Worldwide Port Name (WWPN)
EMC
vmax

Multipathing in Linux

- Multiple paths from OS to storage
- Why?
- Implemented in Linux in multipath-tools package, together with the device-mapper in the Linux kernel, or through 3rd party products
- SCSI device ("LUN") in Linux represents one path to the disk volume on the storage server
- Multipath devices are block devices in Linux

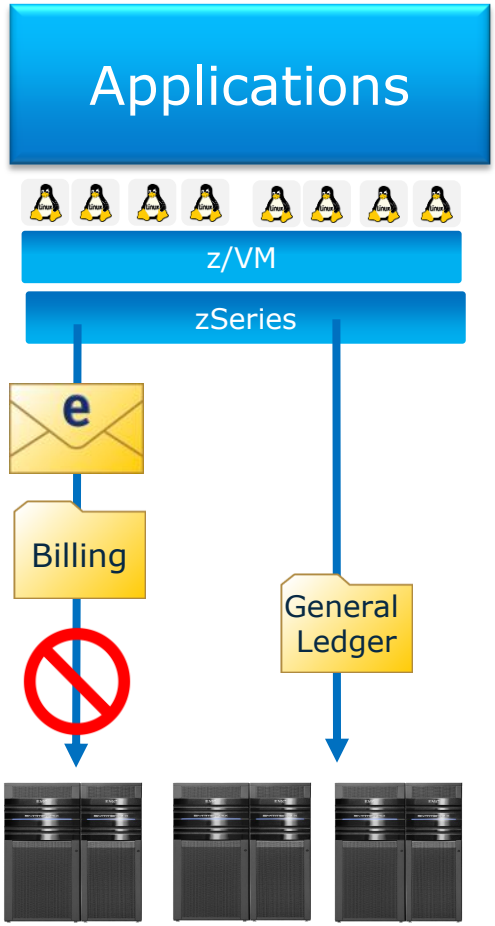

Multipath Device Using Native Linux Multipathing

Excludes edev…

LUN

```
bash-3.2# multipath -ll
mpath2 (360000970000192604545533031304435) dm-3 EMC,SYMMETRIX
[size=898M][features=0][hwhandler=0][rw]
\_ round-robin 0 [prio=2][active]
 \_ 0:0:0:3   sdc   8:32   [active][ready]
 \_ 1:0:0:3   sdh   8:112  [active][ready]
mpath1 (360000970000192604545533031304434) dm-2 EMC,SYMMETRIX
[size=898M][features=0][hwhandler=0][rw]
\_ round-robin 0 [prio=2][active]
 \_ 0:0:0:2   sdb   8:16   [active][ready]
 \_ 1:0:0:2   sdg   8:96   [active][ready]

…… . .
```

Device node name

Linux Notes

- There is no emulation overhead
- With SCSI - Linux handles IO and errors
- This is familiar to open systems admin's
- Multiple IOs can be issued and outstanding
- NPIV can benefit performance but is primarily used for security reasons
- SCSI uses a customizable field for queuing
  - queue_depth
  - Can be set for each device

Linux Queue Depth

- For example:

```
# lszfcp -l 0x0001000000000000 -a|grep queue_depth
queue_depth        = "32"
queue_depth        = "32"
queue_depth        = "32"
queue_depth        = "32"
```

default

lsluns

- lsluns command -looks for all available LUNs by FCP port or host

```
lv192130:~ # lsluns
lsluns
Scanning for LUNs on adapter 0.0.2d03
        at port 0x5000144260070901:
            0x0000000000000000
             0x0001000000000000
             0x0002000000000000
             0x0003000000000000
```

FCP Port

WWPN of storage

LUN

.....

What is NPIV?

- N_port ID Virtualization allows many virtual WWPNs (FCP ports) to one physical WWPN of the CHPID
- Without NPIV all FCP ports on a CHPID have the same WWPN
- NPIV is becoming more popular
  - Non NPIV is still being used for their dev/test environments
- NPIV offers better security and easier administration of LUNs across FCP ports

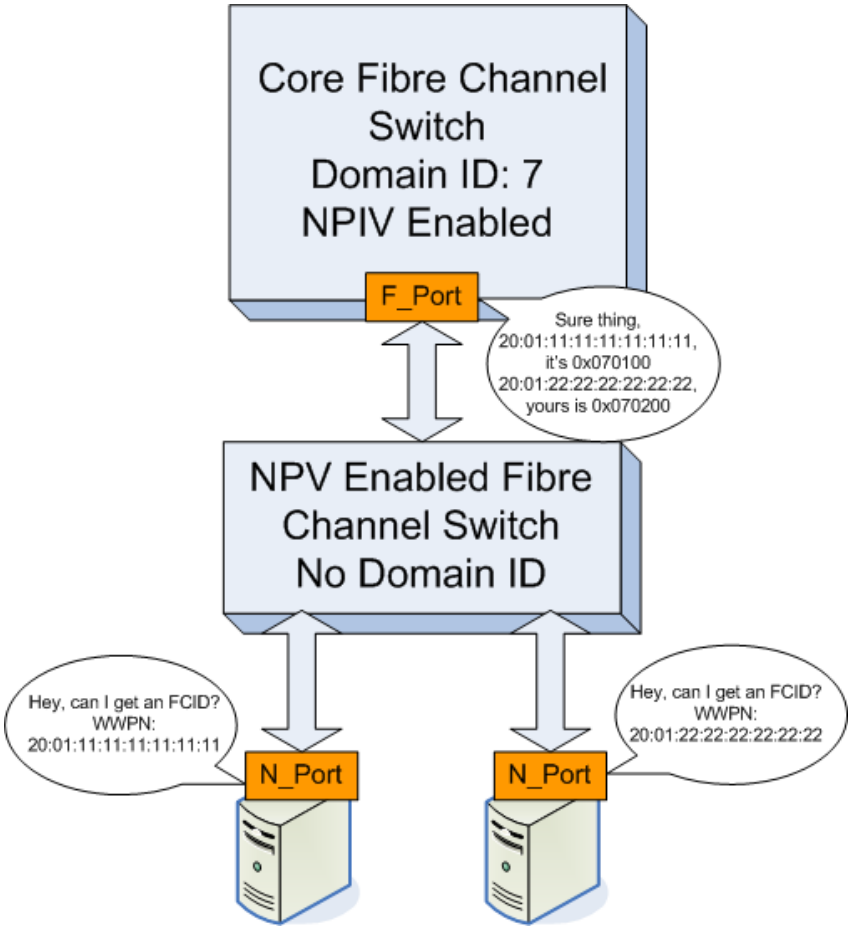

How to Connect the NPIV Dots

- NPIV is enabled on the switch first
- NPIV is then enabled on the CHPID
- You can get a listing of each FCP port's unique WWPN from the HMC
  - The base adapter retains its own original WWxN assigned by the manufacturer
- Each FCP port on the NPIV CHPID now has a unique virtual WWPN
- There is no requirement to manage a subset of LUNs at the Linux layer
- The HMC listing of the CHPID and its FCP ports will show you the virtual WWPNs for its ports
- You cannot tell by looking at the IOCDS if NPIV is enabled or not
- You should know if the FBA/SAN environment is using NPIV or not before you start debugging any issues

Query the FCP Devices

- From CP view all the FCP devices allocated to the Linux virtual machine

```
# vmcp q fcp
```

```
FCP  131F ON FCP   131F CHPID 84 SUBCHANNEL = 000F
      131F DEVTYPE FCP          CHPID 84 FCP
      131F QDIO-ELIGIBLE        QIOASSIST-ELIGIBLE
      WWPN C05076F1F000A09C

FCP  141F ON FCP   141F CHPID 85 SUBCHANNEL = 0010
      141F DEVTYPE FCP          CHPID 85 FCP
      141F QDIO-ELIGIBLE        QIOASSIST-ELIGIBLE
       WWPN C05076F1F000A41C
```

- From Linux view the FCP devices (ports) allocated to the Linux instance

```
# lszfcp
0.0.131f host2
0.0.141f host3
```

z/VM View of FCP

- q chpid 84
```
Path 84 online to devices 1306 1310 1311 1312 1313 1314
1315 131A
Path 84 online to devices 131B 131C 131D 131E 131F
Ready; T=0.01/0.01 16:54:43
(VARIED 1301 Online and attached it)
```
- q 1301
```
FCP  1301 ATTACHED TO LINUX01 1301 CHPID 84
WWPN C05076E4BD8050AC
```
- q 1306
```
FCP  1306 FREE
Ready; T=0.01/0.01 16:57:30
```

z/VM Directory Entry – FCP Devices

- Attach or dedicate(persistent across logoff/logon) FCP ports to Linux guest VM
- FCP ports may be allocated with a different virtual address than the real device address

```
USER LZ192139 CLASS 512M 1G G
     INCLUDE LNXCLASS
     FCP Ports for Linux Class
     DEDICATE 1310 1310
     DEDICATE 1410 1410
     DEDICATE 1312 1312
     DEDICATE 1412 1412
     ……….
```

FICON and FCP Mode

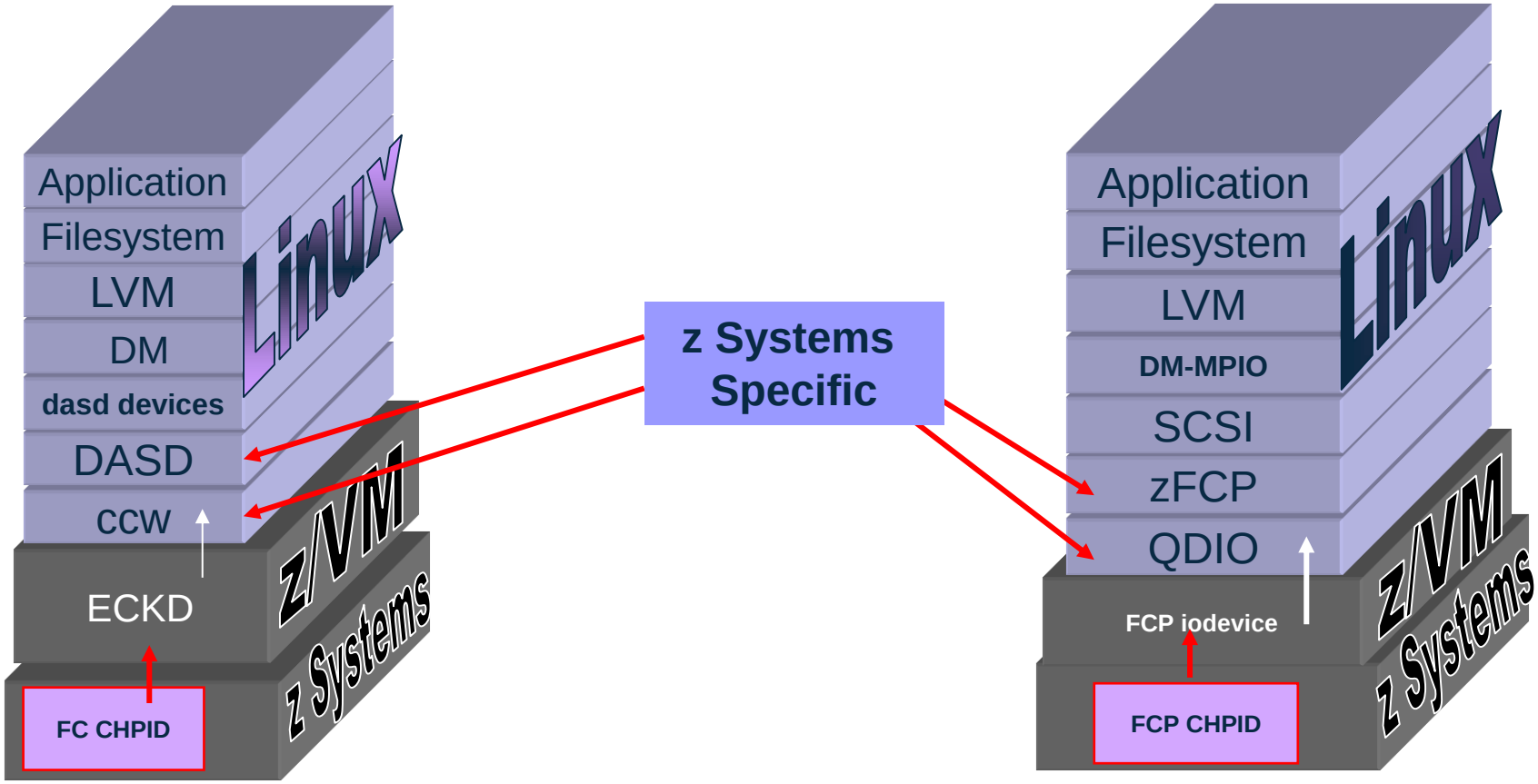

DASD IO Stack

- Host
  - LVM and filesystem
  - Format, partition & vary on
    - `dasdfmt`
    - `fdasd`
    - `chccwdev --online`
- z/VM
  - add mdisk to a VM
- CEC
  - IOCDS – 3390's
- Storage Device
  - Map CKD device

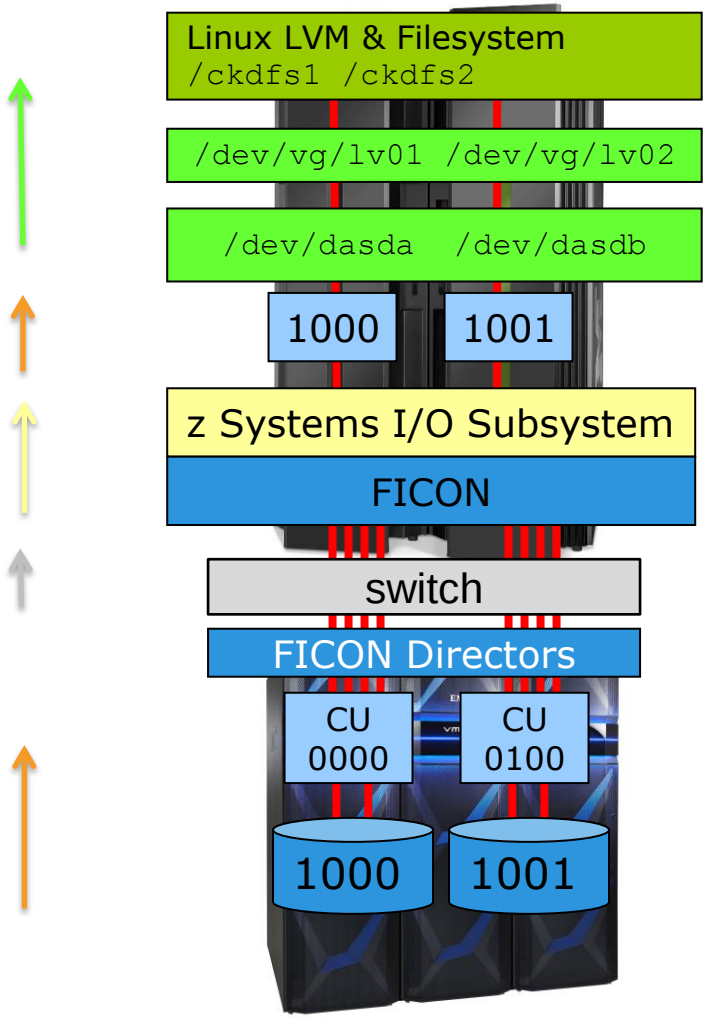

SCSI IO Stack

- Host
  - LVM and filesystem
  - Partition & vary on
    - `fdisk`
    - `zfcp_disk_configure`
    - `chccwdev --online`
- z/VM
  - Add FCP Ports to a VM
- CEC
  - IOCDS – FCP ports
- SAN
  - Zoning
- Storage Device
  - Map/Mask FBA device

May Not be included

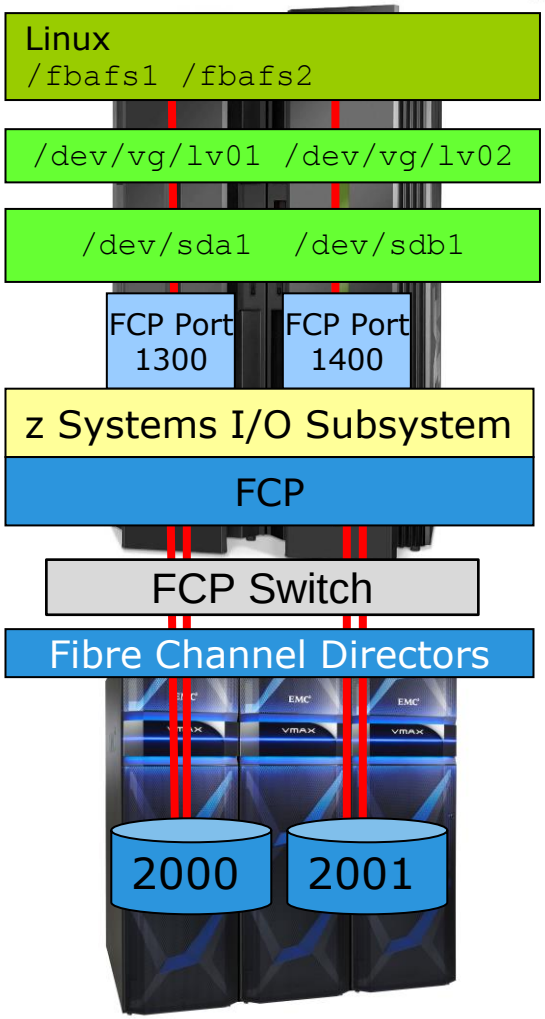

SCSI Device Driver components

- There are several components that come together to execute SCSI IO
- Using the lsmod command you can see the relationship and other components that are needed in Linux

```
# lsmod|grep zfcp
Module                  Size  Used by
zfcp                  125380  32
scsi_transport_fc      71764  1 zfcp
qdio                   76842  3 qeth_l3,zfcp,qeth
scsi_mod              303205  10
sg,sd_mod,zfcp,scsi_transport_fc,scsi_tgt,scsi_dh_alua,scsi_dh_hp_sw,
scsi_dh_rdac,scsi_dh_emc,scsi_dh
```

SCSI Performance

- There is no emulation overhead
- With SCSI - Linux handles IO and errors
  - This is familiar to open systems admin's
- Multiple IOs can be issued and outstanding
- NPIV can benefit performance but is primarily used for security reasons
- SCSI uses a customizable field for queuing
  - queue_depth
  - Can be set for each device

```
# lszfcp -l 0x0001000000000000 -a|grep queue_depth
    queue_depth          = "32"
    queue_depth          = "32"
    queue_depth          = "32"
    queue_depth          = "32"
```

default

FBA as z/VM emulated devices (EDEV)

- Defined in z/VM as 9336 or FB-512 type device
- AKA EDEVs
- Emulation is used at the z/VM and Linux layer
- z/VM communicates to storage array with SCSI fibre channel protocol
- Can be setup as minidisk or direct attached device
- IO handled by Linux and z/VM
- Multipath support handled by z/VM
- Storage can be managed and monitored from z/VM
- Commonly used for Linux OS

FBA as z/VM edev for Paging

- *May be used for z/VM paging devices*
- *Please see IBM z/VM 6.3 Resource Overcommitment paper at: http://public.dhe.ibm.com/software/dw/linux390/perf/ZSW03269-USEN-00.pdf

"The Large Memory Support and the HiperDispatch features introduced with z/VM 6.3 significantly improved the resource overcommitment behavior, as opposed to z/VM 6.2. In addition, the use of EDEV-SCSI devices for z/VM paging allowed substantially higher memory overcommitment levels when compared to using ECKD paging devices. z/VM 6.3 with EDEV-SCSI paging devices can be highly recommended for environments running at high memory overcommitment levels."

z/VM emulated device and multipath

```
q edev d000 details
EDEV D000 TYPE FBA ATTRIBUTES SCSI
  VENDOR: EMC PRODUCT: Invista REVISION: 5400
  BLOCKSIZE: 512 NUMBER OF BLOCKS: 33555840
  PATHS:
    FCP_DEV: 2D03 WWPN: 5000144260070901 LUN: 000D000000000000
      CONNECTION TYPE: SWITCHED STATUS: ONLINE
    FCP_DEV: 2D23 WWPN: 5000144270070901 LUN: 000D000000000000
      CONNECTION TYPE: SWITCHED STATUS: ONLINE
    FCP_DEV: 100C WWPN: 5000144260061101 LUN: 000D000000000000
      CONNECTION TYPE: SWITCHED STATUS: ONLINE
    FCP_DEV: 110C WWPN: 5000144270061101 LUN: 000D000000000000
      CONNECTION TYPE: SWITCHED STATUS: ONLINE
  EQID: 6000144000000010F007092A6B3D4AF6F7000000000200057F
```

WWPN of Storage

FCP Ports

ENVIRONMENT/PLATFORM BENEFITS

Mainframe

- Reliability
- Availability
- Serviceability

Open Systems

- Open source
- Worldwide innovation & collaboration
- Adoption by a community of experts

SCSI continues to evolve…

Flexibility: Best of Both Worlds

- z/VM
  - Mature virtualization
  - Removes physical limitations dynamically
- Linux
  - Enterprise OS based on UNIX standards
  - Innovative
  - Open source Community driven
- Linux on z/VM - Best of both worlds
  - Enables throughput benefits for Linux guest images
  - Enhances overall system performance and scalability

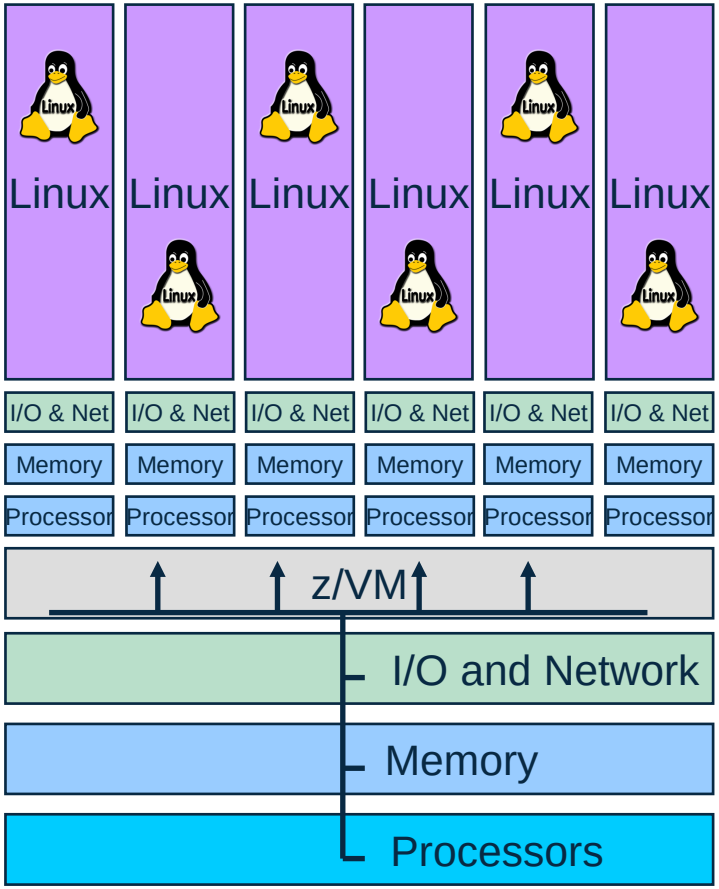

SCSI Innovation

- New host based SCSI commands for thin device cleanup
  - SCSI standard (t10.org) - T10 Technical Committee on SCSI Storage Interfaces
  - SCSI unmap
    - SCSI write same with unmap
  - Support for these SCSI commands are
    - Kernel dependent – Linux vendor and release
    - Storage array dependent

Flexibility

- Ability to exploit open systems solutions
  - Storage virtualization appliances
    - EMC VPLEX, IBM SVC
  - Virtual provisioning or Thin provisioning

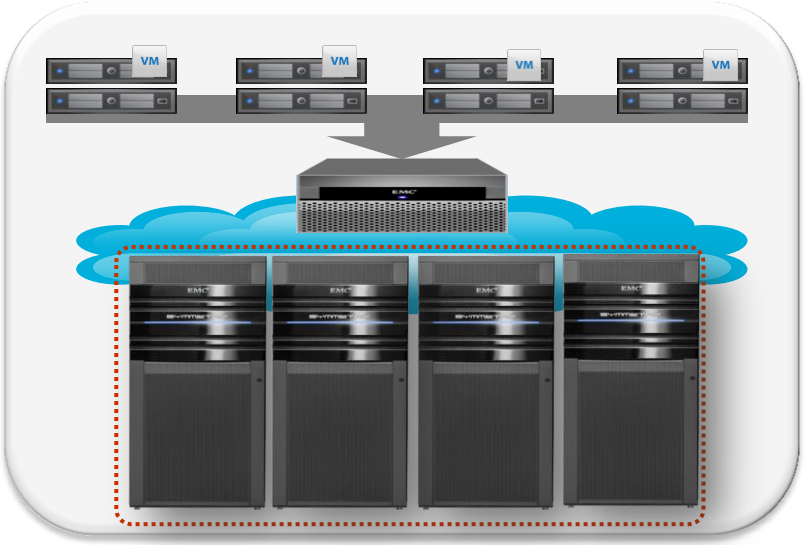

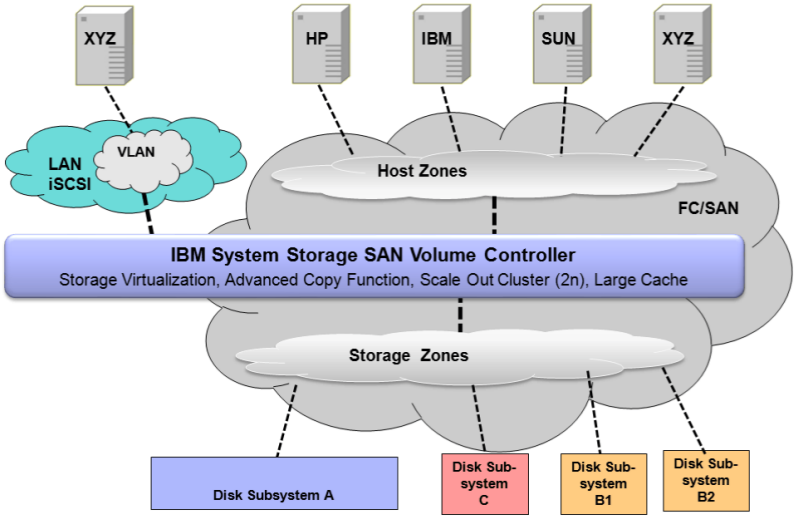

Storage Optimization

- Virtual Provisioning (VP) simplifies Storage Management for FBA
  - Removes data placement requirements from administrators
  - Introduces *thin devices*
  - *Allows for over subscription of storage*

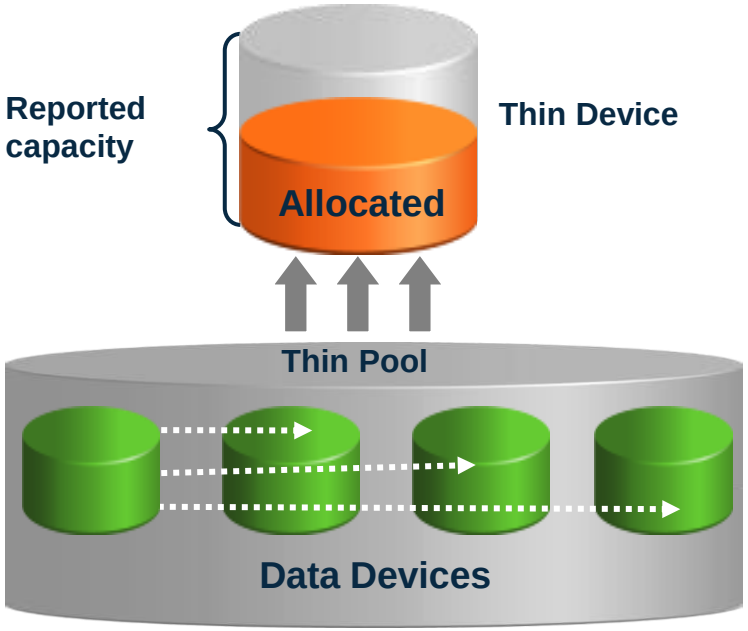

Data Layout – RAID group Allocation

- Capacity for a single logical volume is allocated from a group of physical disks
  - Example: RAID 5 with striped data + parity
- Workload is spread across a few physical disks

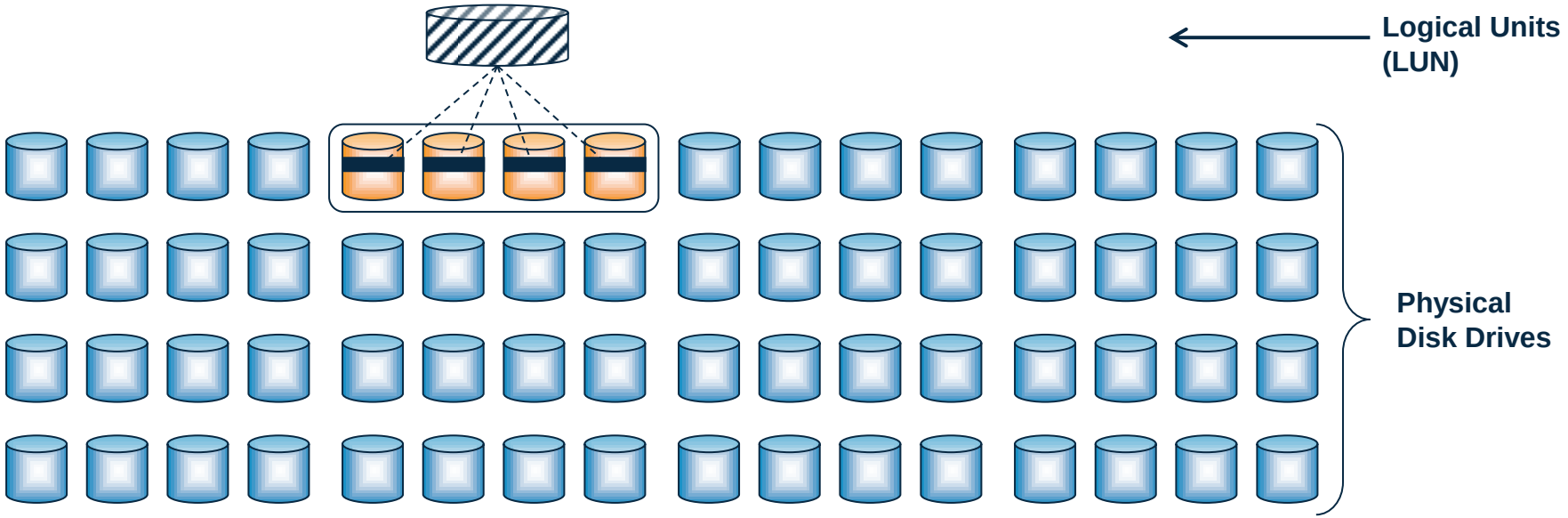

Data Layout – Pool-based Allocation
Virtual Provisioning

- Storage capacity is structured in pools
- Thin devices are disk devices that are provisioned to hosts

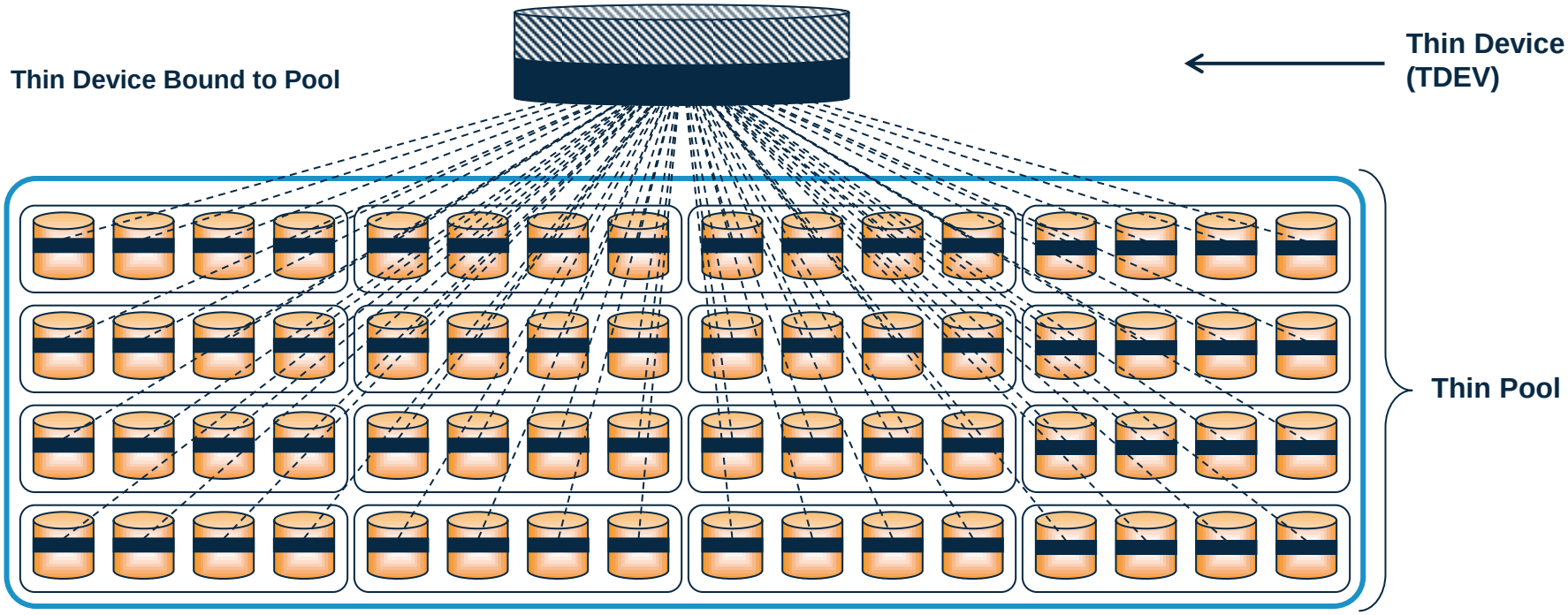

Storage Requirement: Performance

- Storage Layout

Go Wide Before Deep!

- Goal is to spread workload across all available system resources
  - Optimize resource utilization
  - Maximize performance
  - Use what is needed

SCSI Cleanup for Linux on z Systems

- SCSI commands
  - Unmap -sent to thin device to unmap (or deallocate) one or more logical blocks
  - Write Same (with unmap flag) - writes at least one block and unmap(s) other logical blocks
- fstrim – executable, batch command used on filesystems
- Discard
  - option on mkfs and mount command for ext4 and xfs filesystems
  - controls if filesystem supports the SCSI unmap command so it can free specific blocks on thin devices at file deletion

Benefits – Why FCP & SCSI

- Performance advantages
  - SCSI continues to evolve in performance
  - Reason 1: asynchronous I/O
  - Reason 2: no emulation overhead
- User definable FBA disk up to 2TB (today)
- Up to 15 partitions (16 minor numbers per device)
- FBA as SCSI LUNs maximize disk space
  - no low-level formatting
- z Systems integration in existing FC SANs
- Use of existing FICON infrastructure
  - FICON Express adapter cards
  - FC switches / Cabling
  - Storage subsystems
- Dynamic configuration
  - Adding of new LUNs is possible without IOCDS change

Summary

- FBA has best use of physical device space
- Talk to your Storage Admins. They can help demystify this
- SCSI is an industry standard
- SCSI LUNs
  - Can be provisioned rapidly, enabling cloud deployment
  - Is favored for performance
  - Solution innovations

Questions?

EMC²

Johnathan Crossno

VMAX Principal Product Manager
z/VM and Linux on System z

johnathan.crossno@emc.com

EMC Corporation 176 South Street, Hopkinton, Massachusetts 01748-9103 **www.emc.com**