#SHAREorg

SHARE
Technology · Connections · Results

Improving Application Availability with IBM System Automation Scenarios

Ulrike Muench (UMuench@de.ibm.com)
IBM Corporation

Wednesday, August 14, 2013
14076

SHARE in Boston

Copyright and Trademarks

Agenda

- SA z/OS Overview
- Scenario 1 - Cross System Dependency
- Scenario 2 - System Failover
- Scenario 3 - Preferred System
- Scenario 4 - Planned Move
- Scenario 5 - Staged IPL
- Latest new Functions

IBM System Automation family

IBM only vendor to provide end-to-end, cross-platform Automation

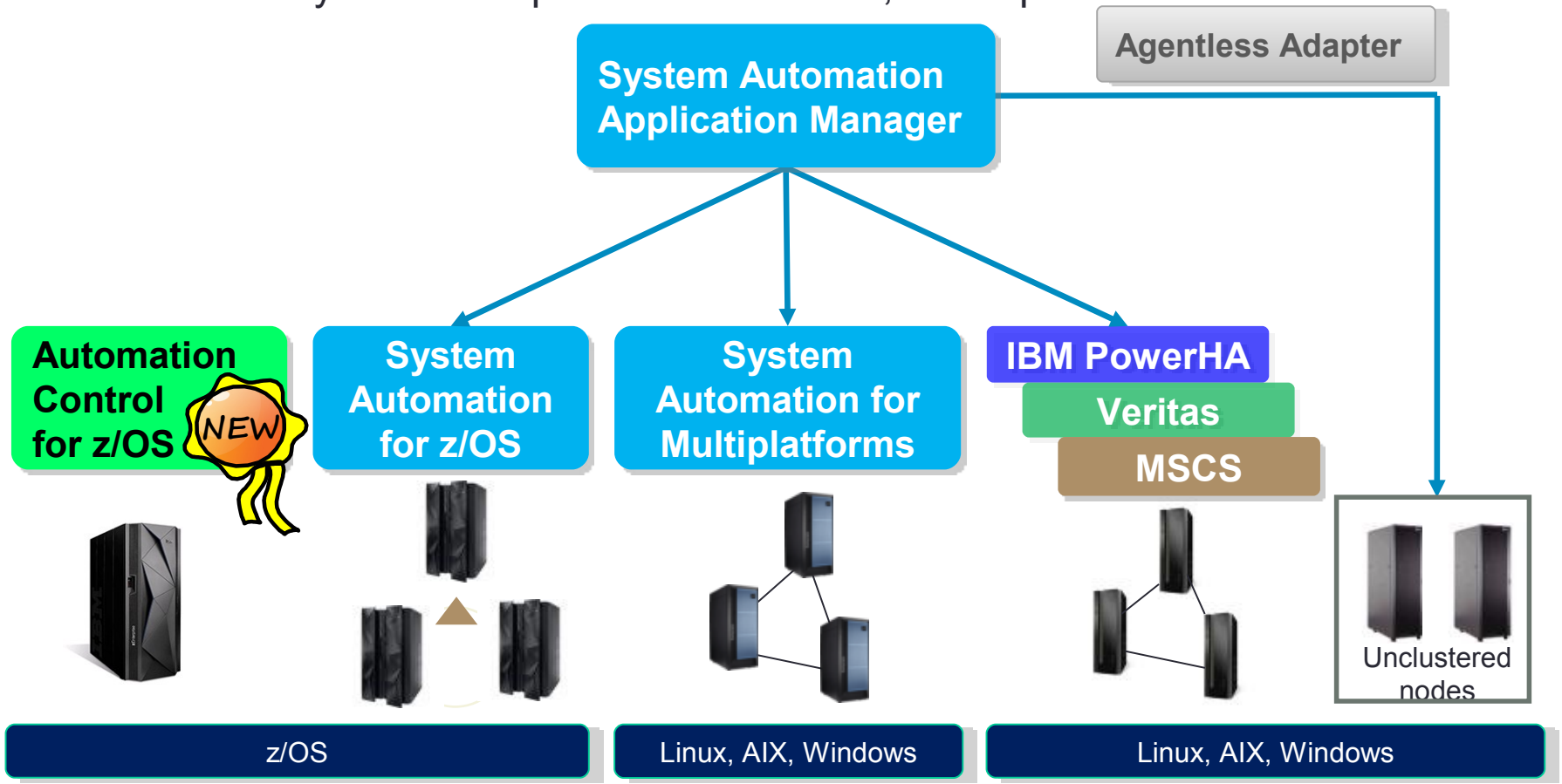

SA z/OS Concepts

- Goal driven automation
- Policy defined and built in ISPF application
- Policy activation in NetView environment

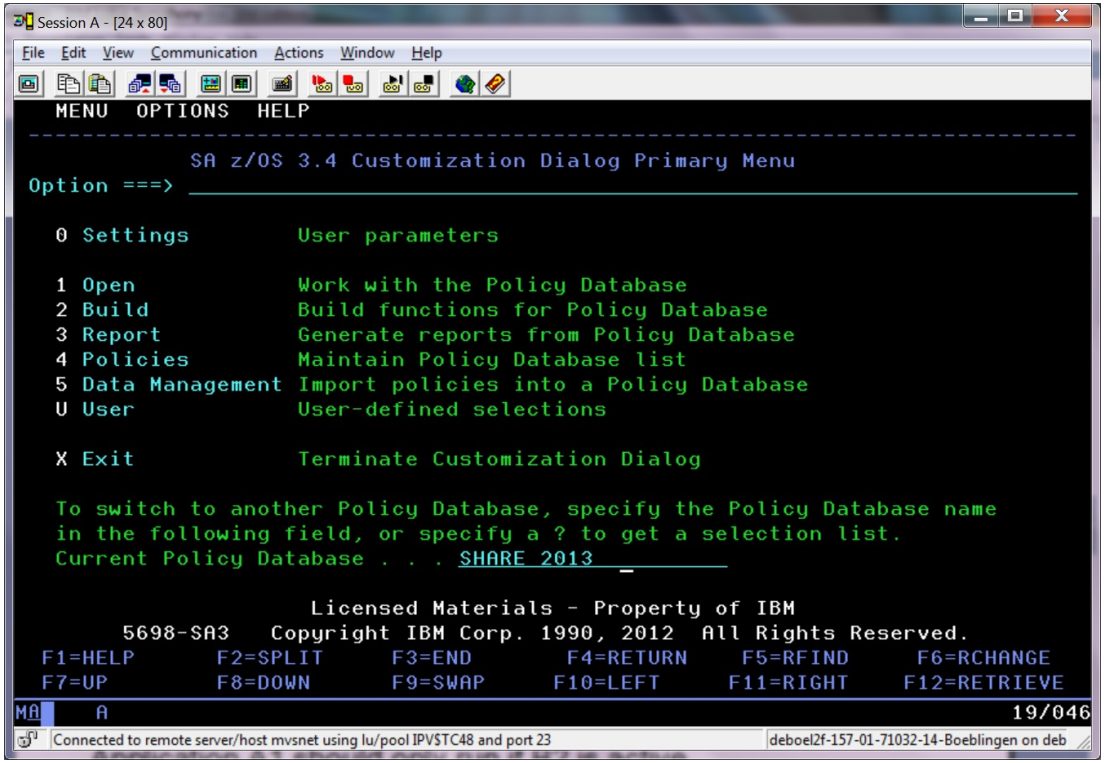

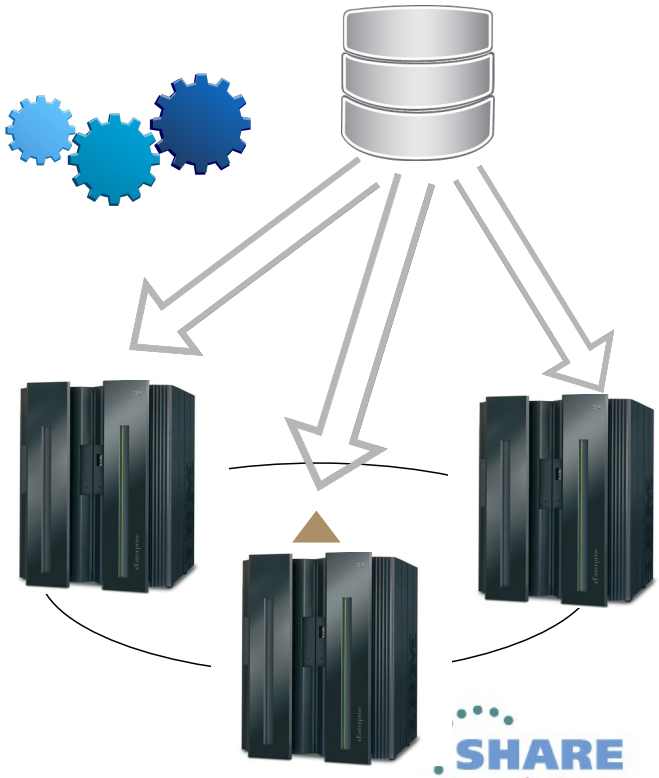

System Setup for the Scenarios

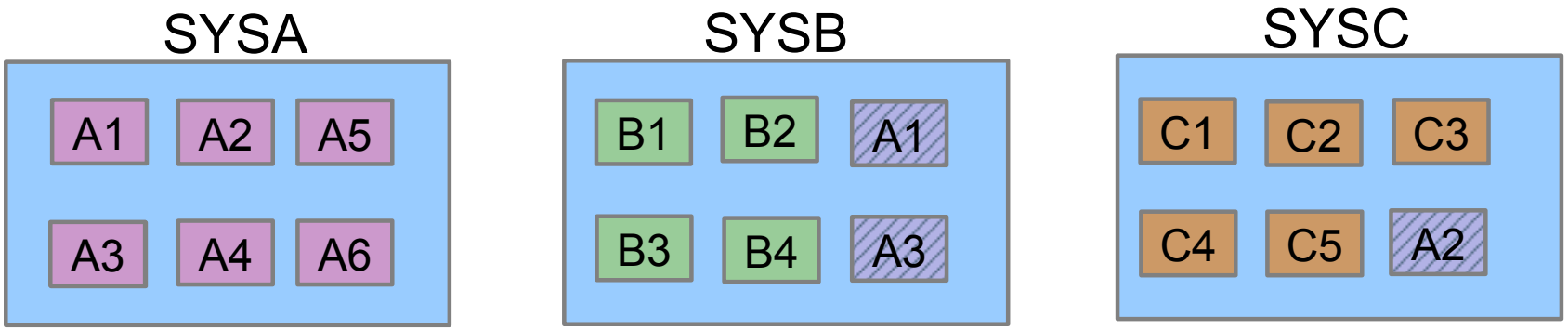

Sysplex comprising 3 systems

Application A1, A2 and A3 usually run on SYSA, but can move to SYSB / SYSC

Agenda

- SA z/OS Overview
- Scenario 1 - Cross System Dependency
- Scenario 2 - System Failover
- Scenario 3 - Preferred System
- Scenario 4 - Planned Move
- Scenario 5 - Staged IPL
- Latest new Functions

Scenario 1 – Cross System Dependency

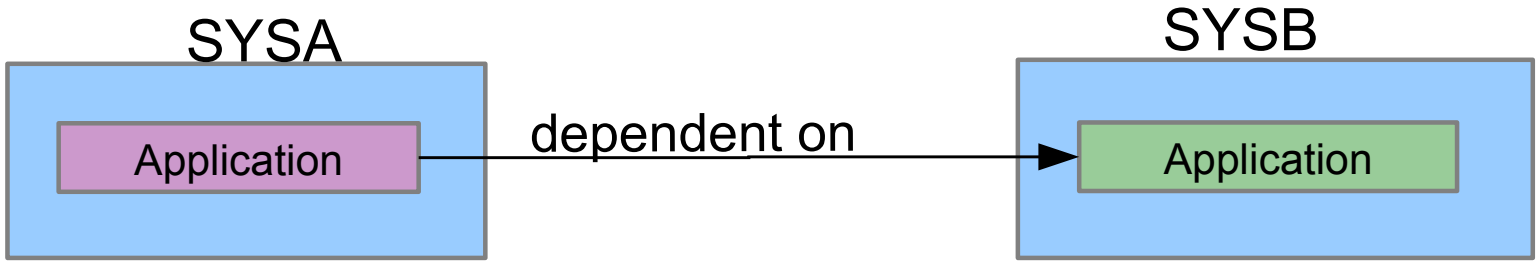

Example:
An application on SYSA is only startable if an Application on SYSB is active

Relationships

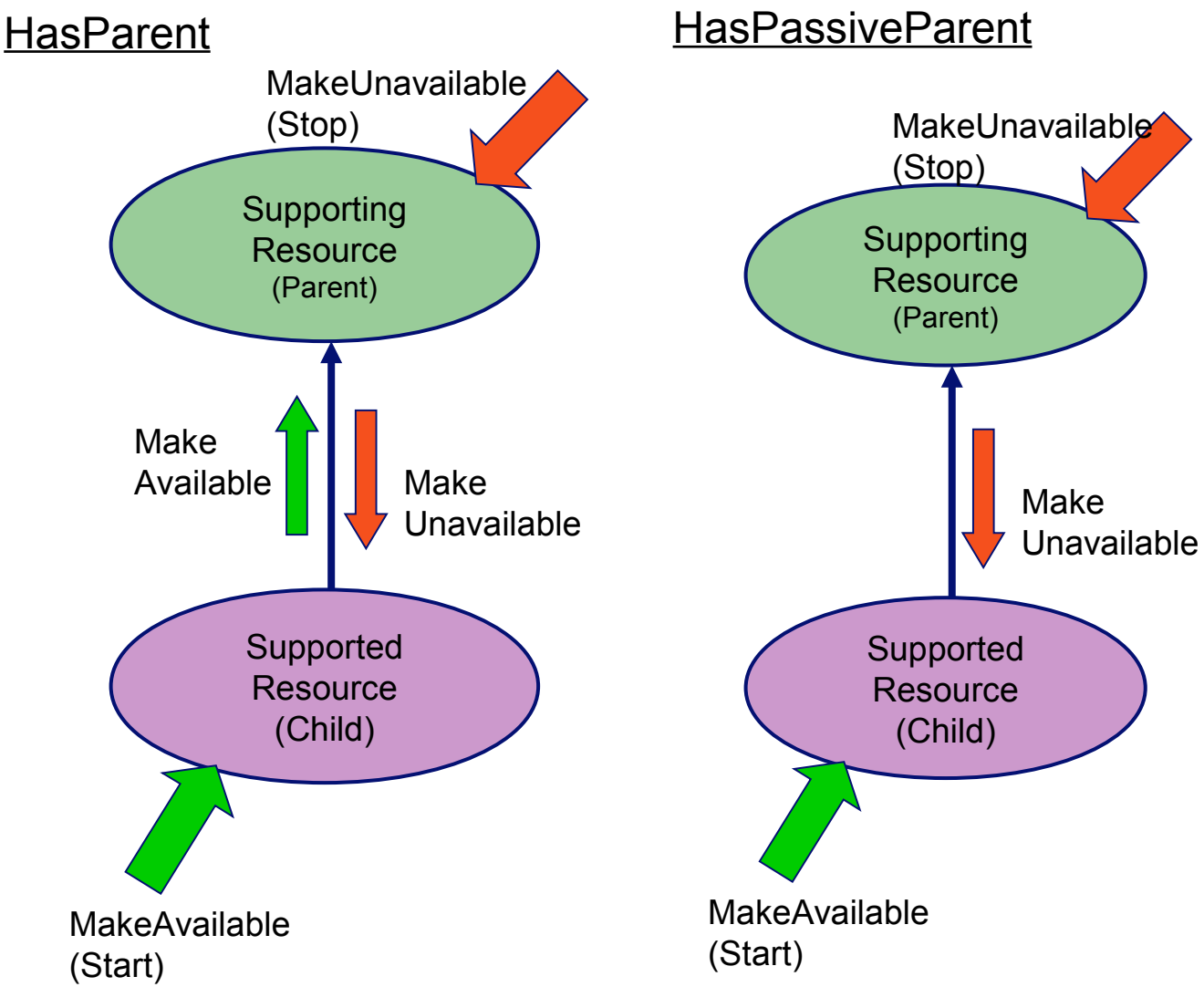

- MakeAvailable
- MakeUnavailable
- PrepAvailable
- PrepUnavailable
- HasParent
- HasPassiveParent
- HasMonitor
- PeerOf
- ForceDown
- Externally

Scenario 1 – Cross System Dependency

Request: Start of A5

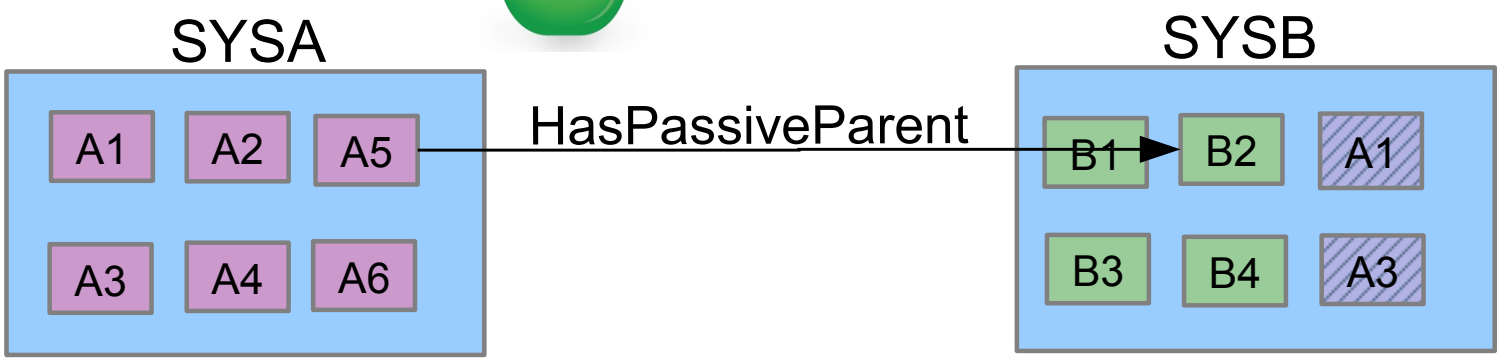

Application A5 is only startable if Application B2 is active

A5 and B2 are down → A5 does not start

A5 is down, B2 is up → A5 starts

Scenario 1 – Cross System Dependency

```
                                Policy Selection                Ro          o 18

Entry Type : Application          PolicyDB Name    : SCENARIO
Entry Name : A5                   Enterprise Name :

Action      Policy Name          Policy Description
_________   SERVICE PERIOD       Select service period
_________   RELATIONSHIPS        Define relationships
_________   MESSAGES/USER DATA   Define messages and user data
_________   STARTUP              Define startup procedures
_________   SHUTDOWN             Define shutdown procedures
```

```
                            Relationship Selection List
Command ===> ____________________________________________________

Entry Type : Application          PolicyDB Name    : SCENARIO
Entry Name : A5                   Enterprise Name :

External Startup. . . _______   (INITIAL ALWAYS NEVER)
External Shutdown . . ______    (FINAL ALWAYS NEVER)

Action  #   Type              Supporting Resource
_______ __  HASPASSIVEPARENT  B2/APL/=
```

Scenario 1 – Cross System Dependency

Request: Start of A6

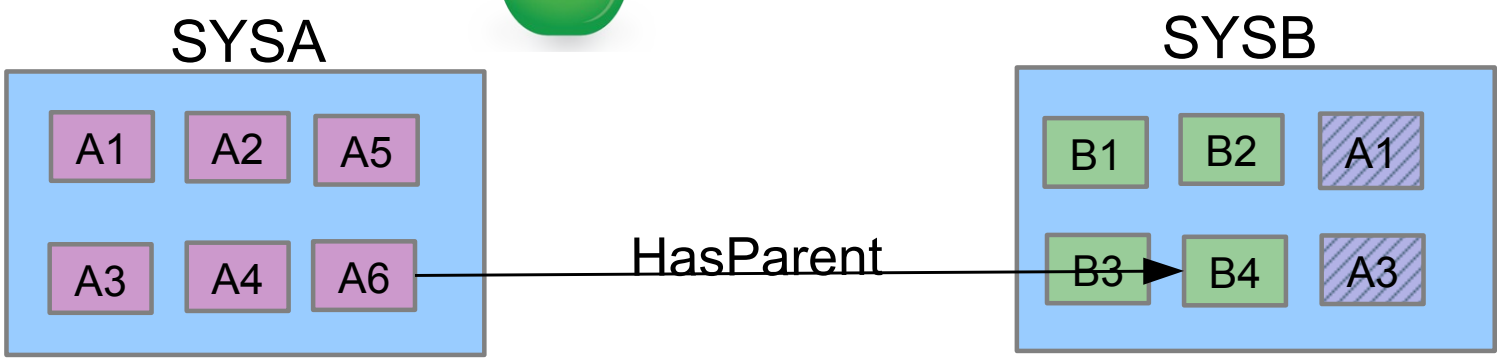

Application A6 is only startable if Application B4 is active

A6 and B4 are down → B4 *and* A6 start

Scenario 1 – Cross System Dependency

```
                                Policy Selection                Row 1 to 1

Entry Type : Application            PolicyDB Name    : SCENARIO
Entry Name : A6                     Enterprise Name :

Action      Policy Name          Policy Description
__________  DESCRIPTION          Enter description
__________  UPWARD CLASS         Select a class to inherit data from
__________  APPLICATION INFO     Define application information
__________  AUTOMATION FLAGS     Define application automation flags
__________  APPLICATION SYMBOLS  Define application symbols
__________  TRIGGER              Select trigger
__________  SERVICE PERIOD       Select service period
__________  RELATIONSHIPS        Define relationships
```

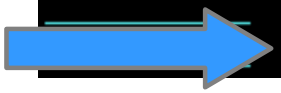

```
                              Relationship Selection List
Command ===> ____________________________________________________________

Entry Type : Application            PolicyDB Name    : SCENARIO
Entry Name : A6                     Enterprise Name :

External Startup. . . ________   (INITIAL ALWAYS NEVER)
External Shutdown . . _______    (FINAL ALWAYS NEVER)

Action  #   Type              Supporting Resource
_______ __  HASPARENT         B4/APL/=
```

Agenda

- SA z/OS Overview
- Scenario 1 - Cross System Dependency
- Scenario 2 - System Failover
- Scenario 3 - Preferred System
- Scenario 4 - Planned Move
- Scenario 5 - Staged IPL
- Latest new Functions

Scenario 2 – System Failover

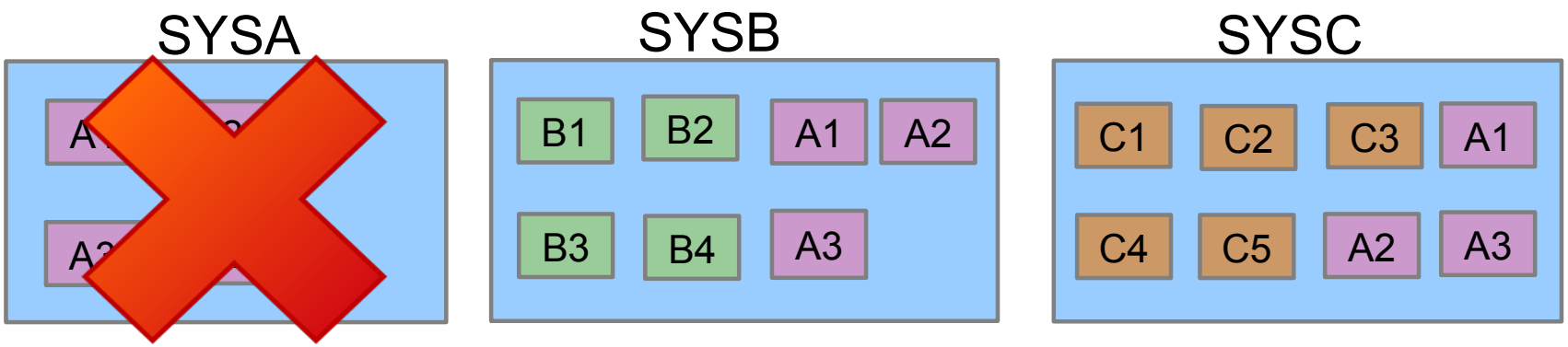

SYSA fails → Applications A1, A2 and A3 start on alternate systems

SA z/OS Groups - Type

Application Groups	
Type	System
	Sysplex

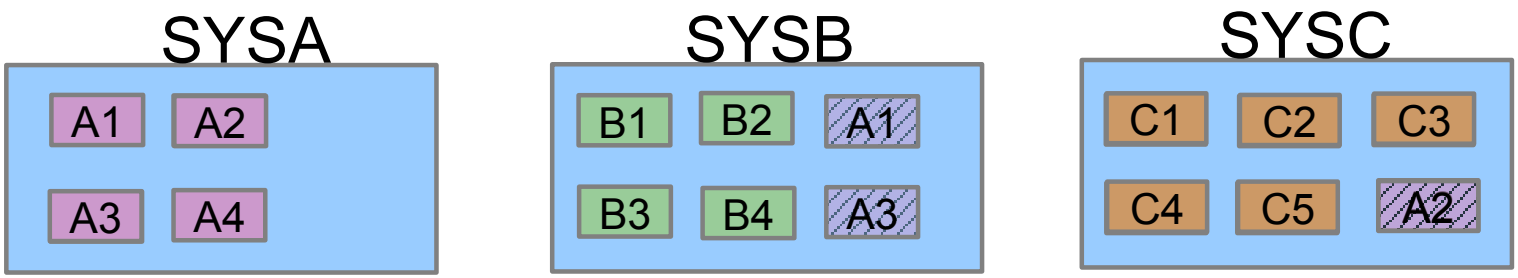

Type Sysplex:

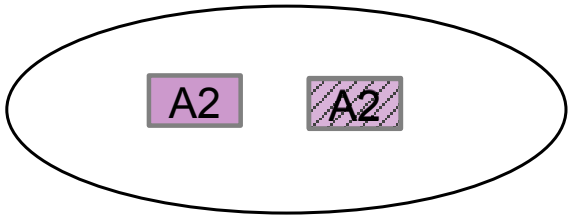

Type System:

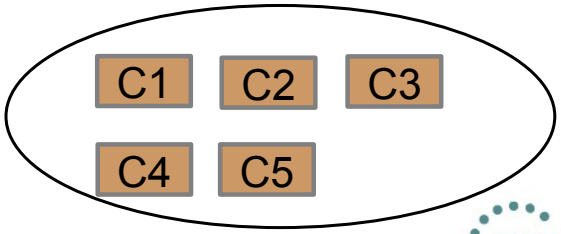

SA z/OS Groups - Nature

Application Groups			
Nature	Basic	Server	Move
Active members	all	any	one

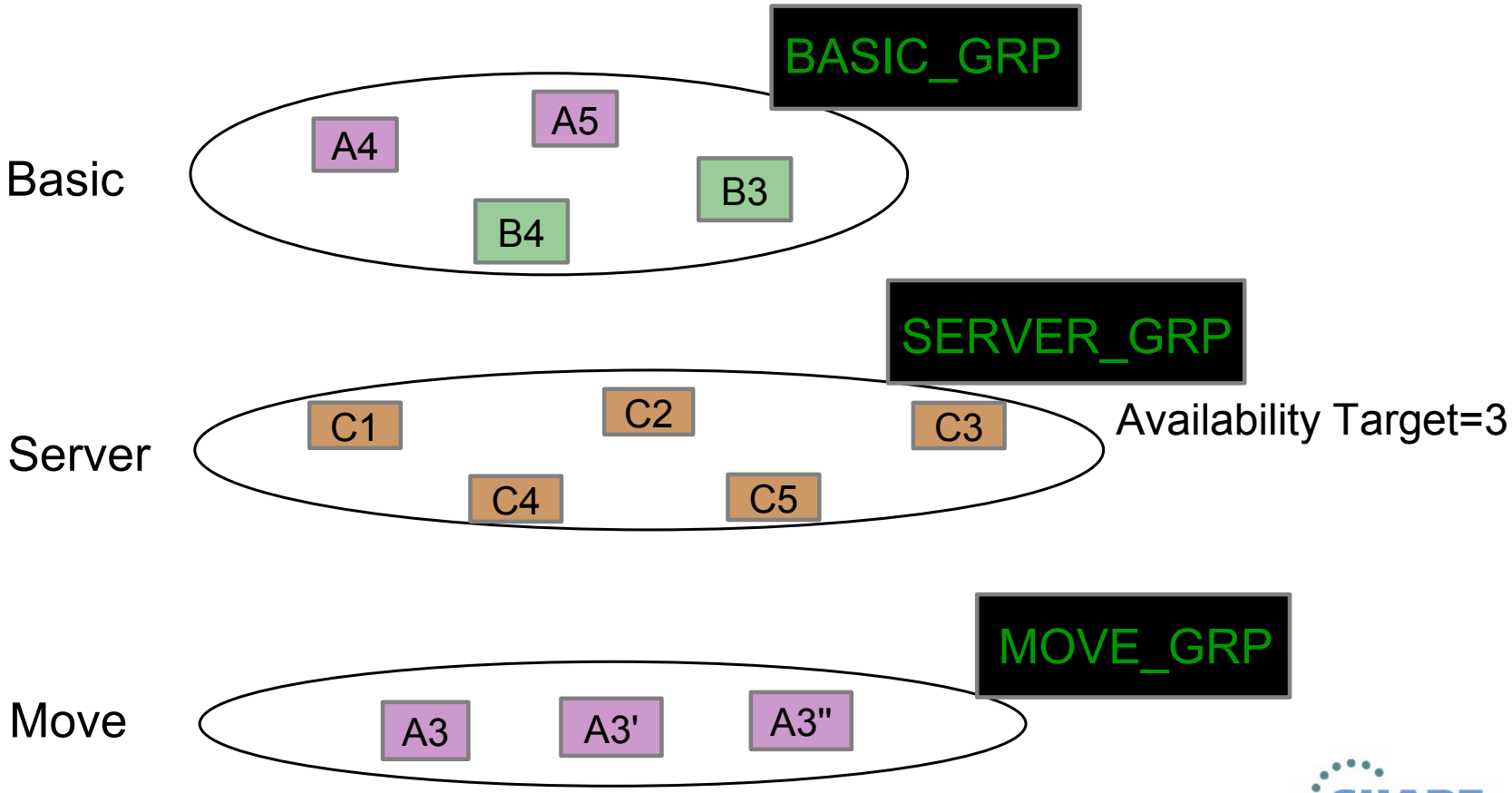

SA z/OS Groups

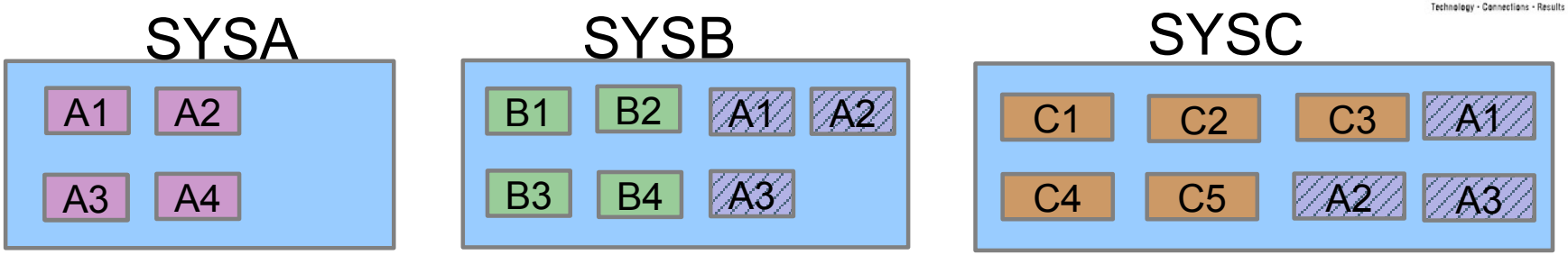

To move applications A1 – A3: Sysplex groups of Nature Move

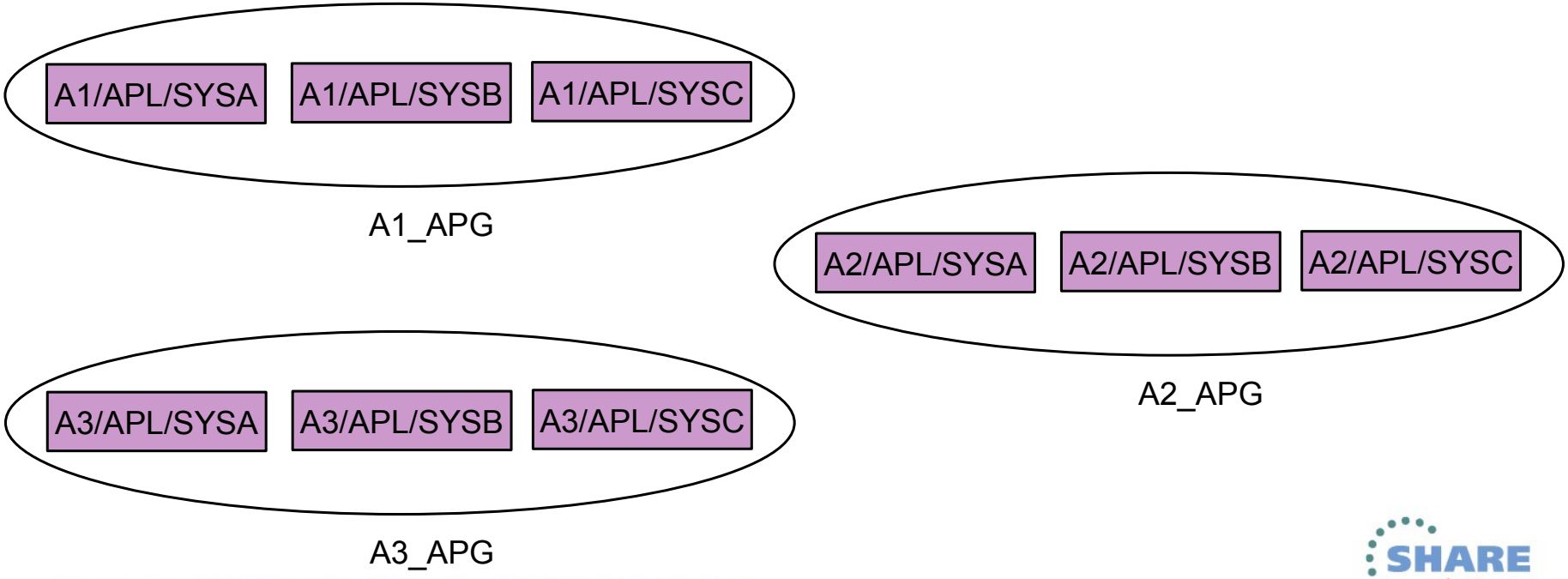

SA z/OS Groups – Customization Dialog

```
                              Entry Name Selection

Entry Type : ApplicationGroup        PolicyDB Name    : SCENARIO
                                     Enterprise Name :

Action       Entry Name              Short Description
___________  A1_APG                  Move group for Application A1
___________  A2_APG                  Move group for Application A2
___________  A3_APG                  Move group for Application A3
```

```
                           Application Group Information
Command ===> ____________________________________________________________

Entry Type : ApplicationGroup        PolicyDB Name    : SCENARIO
Entry Name : A1_APG                  Enterprise Name :

The following field was specified when the Application Group was
defined and cannot be modified:
Application Group Type    : SYSPLEX

Nature . . . . . . . . . . . MOVE__            (BASIC MOVE SERVER)
```

Linkage – Customization Dialog

```
                    Where Used

Entry Type : Application          PolicyDB Name    : SCENARIO
Entry Name : A1                   Enterprise Name :

Action      Status          Name                          Type
___________ SELECTED        A1_APG                        APG
___________                 A2_APG                        APG
___________                 A3_APG                        APG
```

```
                    Where Used

Entry Type : ApplicationGroup     PolicyDB Name    : SCENARIO
Entry Name : A1_APG               Enterprise Name :

Action      Status          Name                          Type
___________ SELECTED        SAM7PLEX                      GRP
```

```
                    Systems for Group

Entry Type : Group                PolicyDB Name    : SCENARIO
Entry Name : SAM7PLEX             Enterprise Name :

Action      Status          System
___________ SELECTED        SAM7
___________ SELECTED        SAM8
___________ SELECTED        SAM9
```

Agenda

- SA z/OS Overview
- Scenario 1 - Cross System Dependency
- Scenario 2 - System Failover
- Scenario 3 - Preferred System
- Scenario 4 - Planned Move
- Scenario 5 - Staged IPL
- Latest new Functions

Scenario 3 - Preferred System

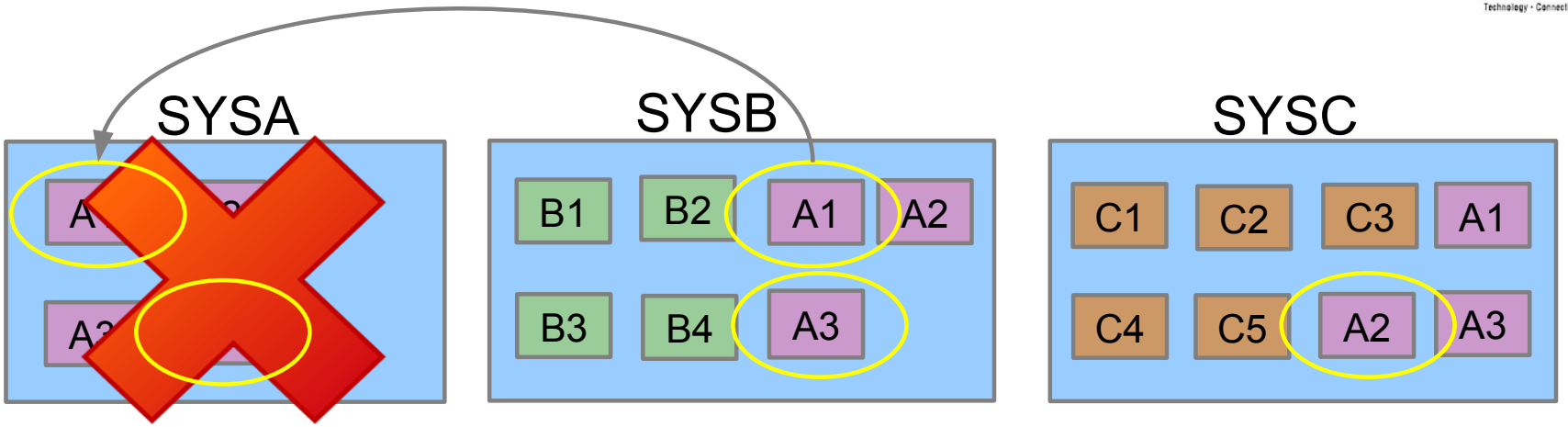

After System failure – when SYSA is up again

A1 should move back to SYSA

A2 should stay on SYSC

A3 should stay on SYSB

A4 should just start again on SYSA

Preference Values

- To prefer special members in a group
- Values between 0 and 3200 are valid
- The higher the value, the more preferred
- Usually a preference difference greater than 250 initiates a move

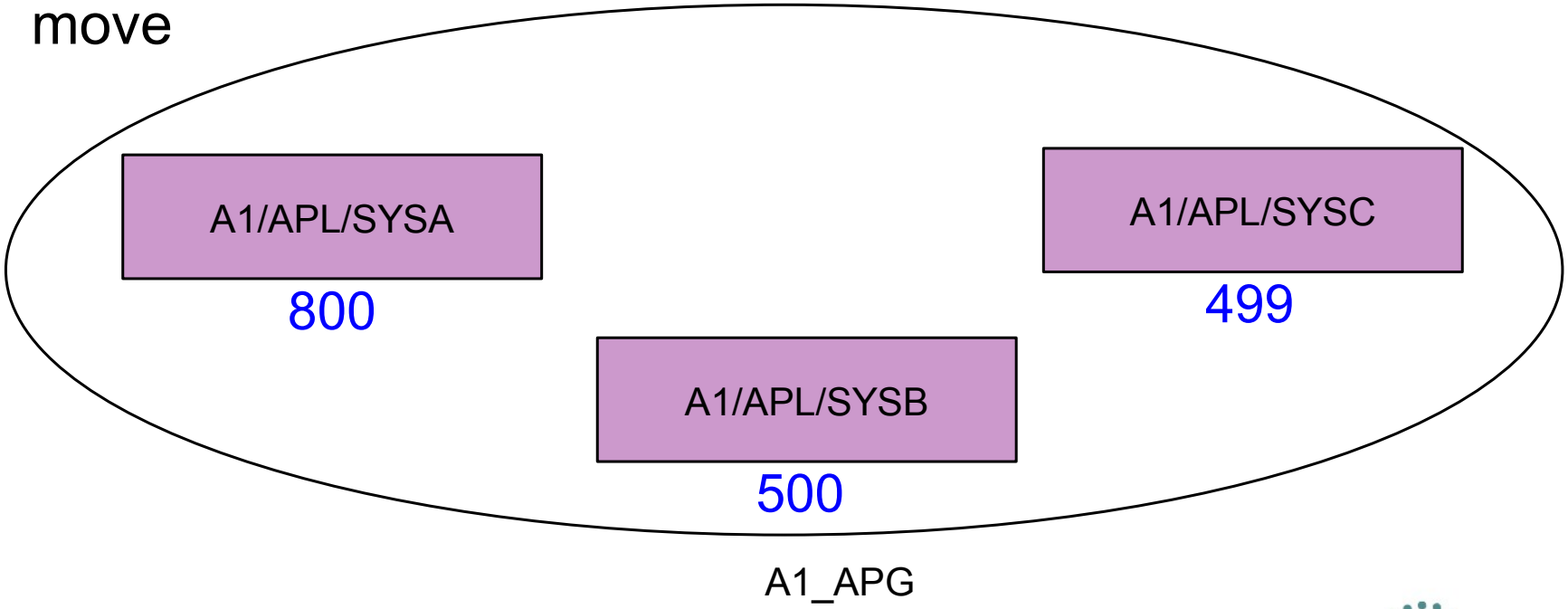

Preference Values - continued

After System restart of SYSA:

A1 should move back to system SYSA

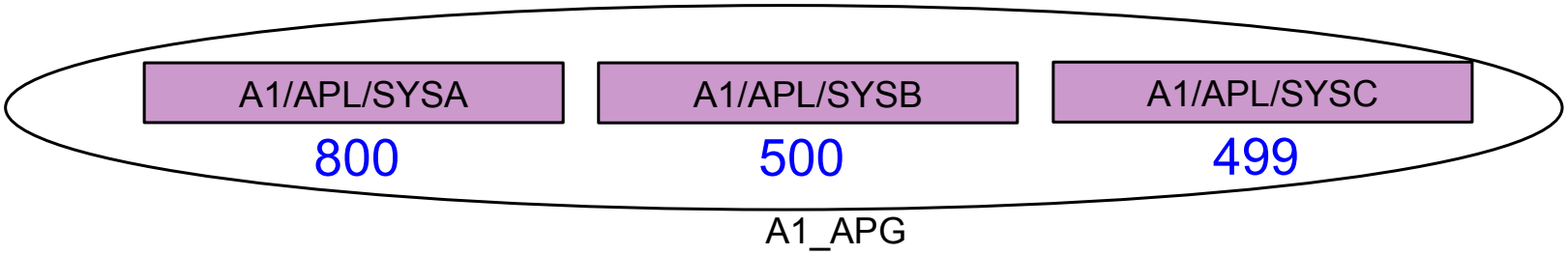

A2 should remain on its alternate system SYSC

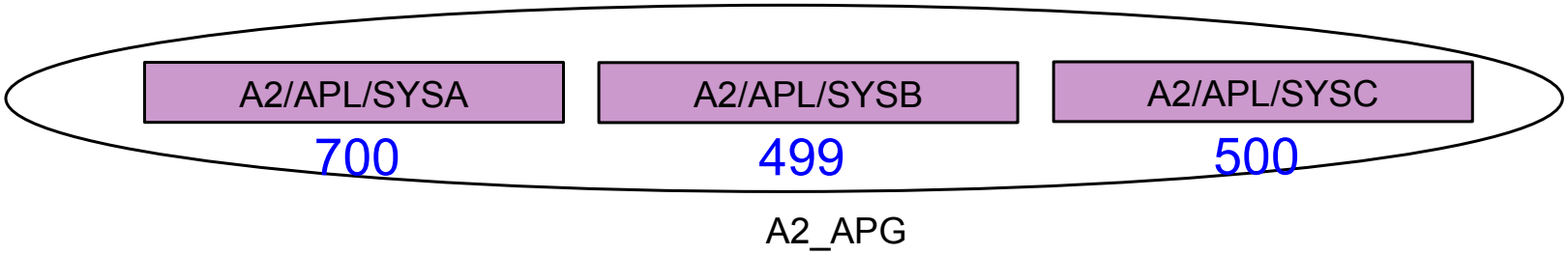

A3 should remain on its alternate system SYSB

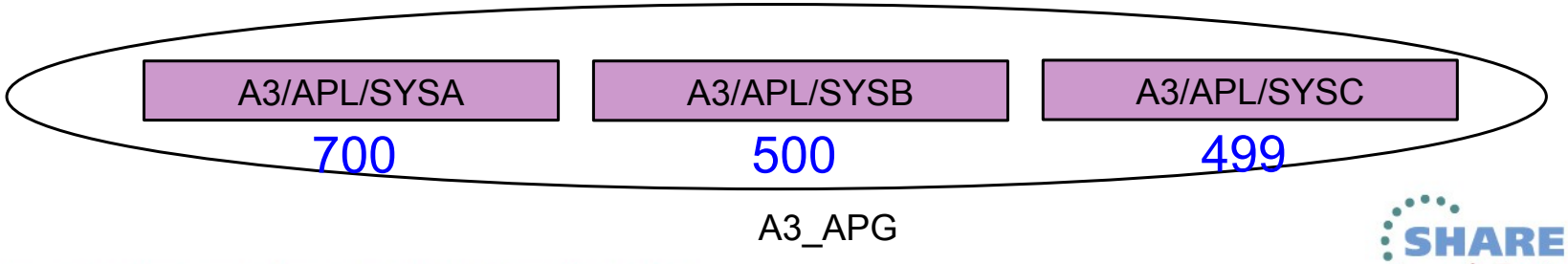

Preference Value – Customization Dialog

```
                                Select Resources

Entry Type   : ApplicationGroup      Entry Name : A3_APG
Sysplex      : SAM7PLEX

  Number of selected Resources    : 3
  Availability Target             : 1        (Move Application Group)
  Show all Resources . . . . . . . NO        (YES NO)
  Show only Resources with String. ____________________________________

Action    Preference  Resource Name              Entry Name
_________ 700         A3/APL/SAM7                A3
_________ 500         A3/APL/SAM8                A3
_________ 499         A3/APL/SAM9                A3
```

Agenda

- SA z/OS Overview
- Scenario 1 - Cross System Dependency
- Scenario 2 - System Failover
- Scenario 3 - Preferred System
- Scenario 4 - Planned Move
- Scenario 5 - Staged IPL
- Latest new Functions

Scenario 4 – Planned Move

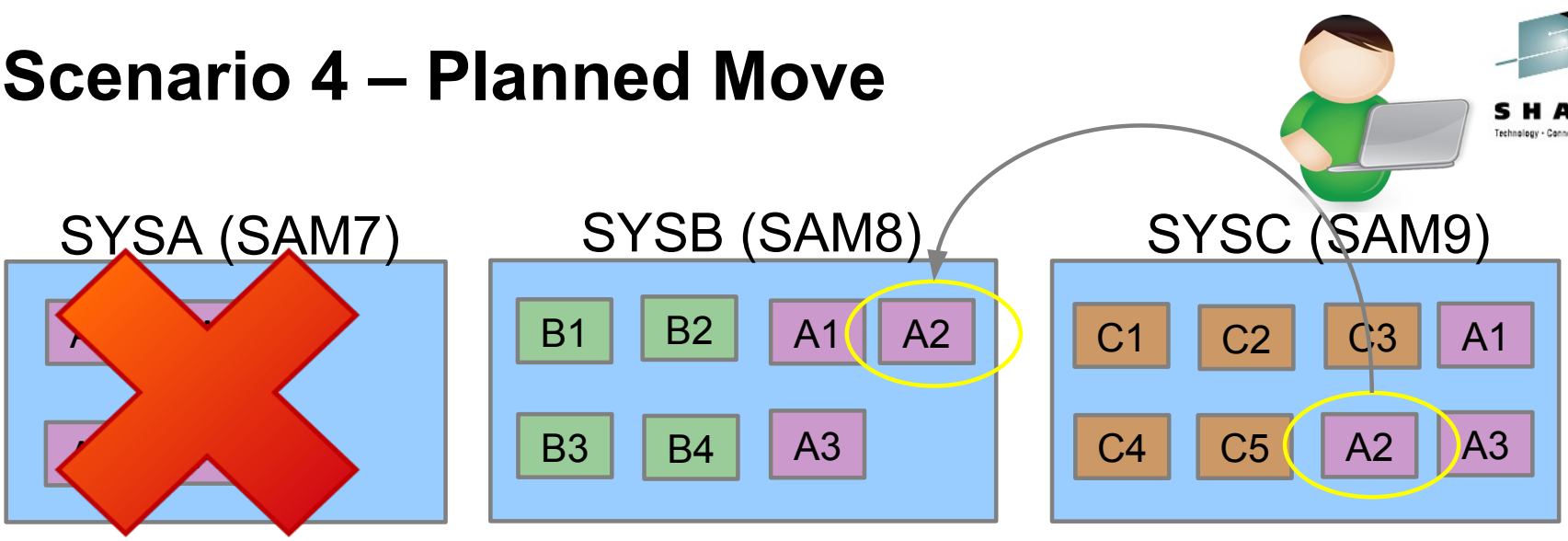

Application A2 should move to SYSB (SAM8) → INGMOVE

```
INGKYMV0                    SA z/OS  - Command Dialogs      Group  1      of 3
Domain ID    = IPCNG      ---------- INGMOVE  ----------    Date = 07/22/13
Operator ID = BUMU              Sysplex = SAM7PLEX          Time = 14:26:34

 B Start     C Stop      D INGRELS  E INGVOTE  F INGINFO  G Members  I INGSCHED
 J INGGROUP M Move      P Prepare  R Reset     X Box Group            / scroll
Cmd Group name    Obs Status           ---- Systems ----              Move to
--- -----------   -----------  -------- -------- -------- ---------   --------
__  A1_G          AVAILABLE    SAM7     SAM8     SAM9                 SAM9
__  A2_G          AVAILABLE    SAM7     SAM8     SAM9                 SAM8
__  A3_G          AVAILABLE    SAM7     SAM8     SAM9                 SAM9
```

SAM8 is preselected; can be overtyped

Agenda

- SA z/OS Overview
- Scenario 1 - Cross System Dependency
- Scenario 2 - System Failover
- Scenario 3 - Preferred System
- Scenario 4 - Planned Move
- Scenario 5 - Staged IPL
- Latest new Functions

Scenario 5 – Staged IPL

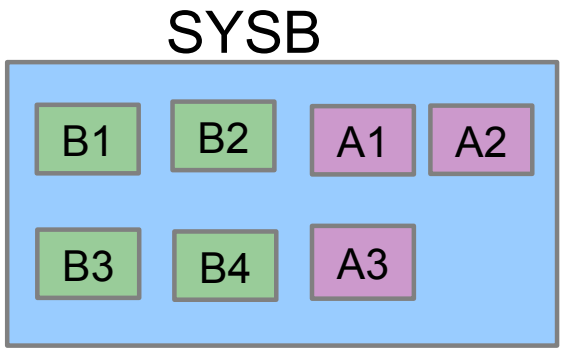

Runmode	Applications
BASE_ELEMENT	B1, B2, B3, B4
BUSINESS	B1, B2, B3, B4, A1, A2, A3

At System Start on SYSB only z/OS **Base** Elements B1, B2, B3 and B4 should come up

→ Have Runmode set to BASE_ELEMENT

At end of Maintenance all business applications should be started again

→ Set Runmode to BUSINESS via INGRUN

Scenario 5 – Staged IPL

Runmode and Runtoken Definitions in Policy

```
          UET Keyword-Data Specification                Line 00000001

Entry: INGRUN                                  Type: MODE
Mixed case . . . NO   (YES NO)                 Keyword length. . . 20   (1-64)

Cmd Keyword                Data
___ BASE_ELEMENT           BASIC
___ BUSINESS               'BASIC WEBSPHERE IMS CICS DB2'
```

```
                          Application Information

Entry Type : Application              PolicyDB Name    : BASE_34
Entry Name : TSO                      Enterprise Name  : BASE_34

Runtokens  . . . . . . .
BASIC
```

Agenda

- SA z/OS Overview
- Scenario 1 - Cross System Dependency
- Scenario 2 - System Failover
- Scenario 3 - Preferred System
- Scenario 4 - Planned Move
- Scenario 5 - Staged IPL
- Latest new Functions

Batch Command Receiver – Parallel execution

Batch Command Receiver – Parallel execution

- Processing no longer tied to TWS workstation (optionally)
- Eliminates deficiency that only one command can be processed at a time
  - New support allows concurrent processing of commands originated from multiple jobs
  - Triggered by SERVER=* parameter

Prereqs TSO REXX function package -> INGTXFPG

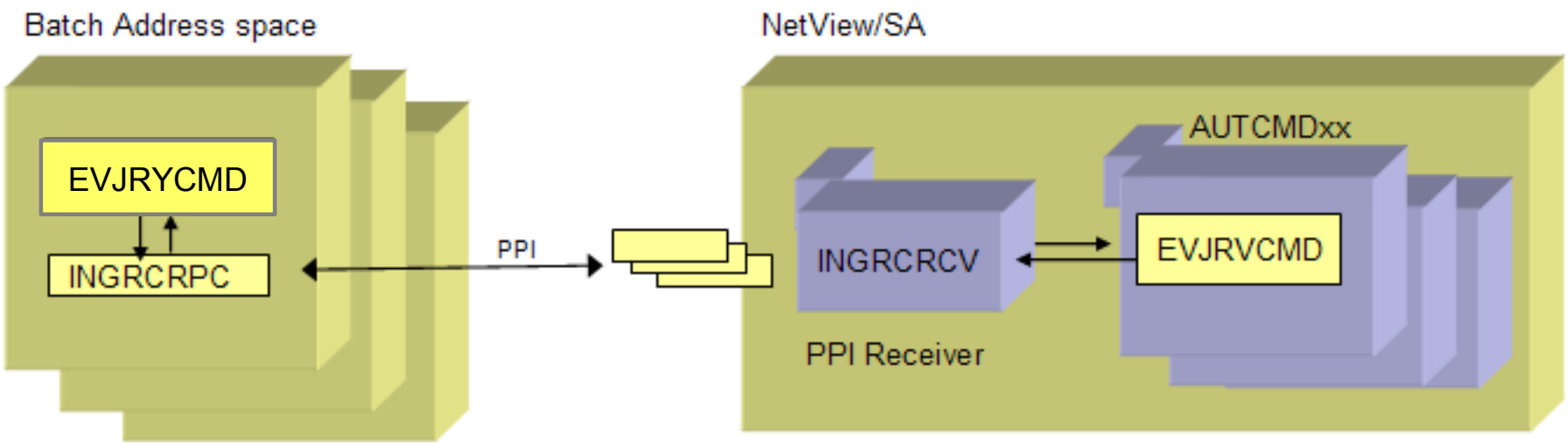

Support of Screen Width > 80 Characters

Support of Screen Width > 80 Characters

- Provided for all Commands that have horizontal scrolling
  - INGLIST
  - DISPGW
  - DISPSTAT
  - DISPMTR
  - INGIMS (dependent regions)
  - INGAMS

```
INGKYSTO                  SA z/OS  - Command Dialogs     Line  1     of 107
Domain ID   = IPXFG      -------- INGLIST   ---------     Date = 02/05/11
Operator ID = WAS              Sysplex = KEYAPLEX         Time = 19:44:08
 A Update   B Start    C Stop     D INGRELS  E INGVOTE  F INGINFO  G Members
 H DISPTRG  I INGSCHED J INGGROUP K INGCICS  L INGIMS   M DISPMTR  T INGTWS
 U User     X INGLKUP  / scroll
CMD Name        Type System   Compound      Desired      Observed    Nature   Automation Startable    Health       Auto Hold Starttype  Stoptype   Trigger
--- ----------- ---- -------- ------------- ------------ ----------- -------- ---------- ------------ ------------ ---- ---- ---------- ---------- --------
__  AM          APL  KEYA     SATISFACTORY  AVAILABLE    AVAILABLE            IDLE       YES          N/A          YES  NO
__  AM          APL  KEYB     SATISFACTORY  UNAVAILABLE  SOFTDOWN             IDLE       YES          N/A          YES  NO
__  AM          APL  KEYC     SATISFACTORY  AVAILABLE    AVAILABLE            IDLE       YES          N/A          YES  NO
__  AM_X        APG            SATISFACTORY  AVAILABLE    AVAILABLE   SERVER   INTERNAL   YES          N/A          YES  NO
__  AM2         APL  KEYA     SATISFACTORY  UNAVAILABLE  SOFTDOWN             IDLE       YES          N/A          YES  NO
```

Panel body supports 132 and 160 chars width

SDF Enhancements

SDF Enhancements

- Support for multiple BODY sections in panel
  - BODYHEADER statement defines how to format the header
  - BODYTITLE statement defines the title text of the section.
- New Forward/Backward command
- New exit AOFEXX05 to support User symbols
- ProcOps resources shown in SDF

Body header

```
KEY4                         A l l
===>
                                                                                                                   06/29/11 11:05
Subsystem Sta 61/113(113) Jobname   Reply ID / Message text ------------------------------------------------------------------------------- 1/3(3)
OMIIM2       IMS1_DB_CTL  IMS941C4  054 DFS996I *IMS READY* M941
OMIIM2CS     IMS1_DB_MP1  NETASYST  027 DSI802A IPSFP REPLY WITH VALID NCCF SYSTEM OPERATOR COMMAND
OMIIM2EZ     IMS1_DB_MP2  IMS942C4  044 DFS996I *IMS READY* M942
OMIIM2HD     IMS1DB_DBRC
OMIIM2HI     IMS1DB_DLS
OMIIM2RC     INGAHPPI
OMIIOC0      JLMS01
OMVS         JLMS02
RACF         JLMS03
RESOLVER     JLMS04
RMF          JLMS05
RMFGAT       JLMS06       Jobname   Message text +-+-+-+-+-+-+-+-+-+-+-+-+-+-+-+-+-+-+-+-+-+-+-+-+-+-+-+-+-+-+-+-+-+-+-+-+-+-+-+-+-+-+-+-+-+-+-+-+-+-+-+ 1/6(6)
RRS          JLMS07       IMS941SQ  CQS0008W STRUCTURE S941MSGQ         IS VOLATILE; CONSIDER STRUCTURE CHECKPOINT H941CQS
SNA4DBM1     JLMS08       IMS941SQ  CQS0008W STRUCTURE S941EMHQ         IS VOLATILE; CONSIDER STRUCTURE CHECKPOINT H941CQS
SNA4DIST     JLMT01       IMS941SQ  CQS0008W STRUCTURE S941MSGQOV       IS VOLATILE; CONSIDER STRUCTURE CHECKPOINT H941CQS
SNA4IRLM     JLMT02       IMS941SQ  CQS0008W STRUCTURE S941EMHQOV       IS VOLATILE; CONSIDER STRUCTURE CHECKPOINT H941CQS
SNA4MSTR     JLMT03       IMS942C4  AOF501E 00:00:58 : RECOVERY FOR MINRES IMS2CTL.DFS3257I HALTED - 3 ERRORS SINCE 00:00:53 ON 06/29/2011 - CRITICAL ERROR T
SYSVAPPL     JLMT04       IMS941C4  AOF501E 00:01:18 : RECOVERY FOR MINRES IMS1CTL.DFS3257I HALTED - 3 ERRORS SINCE 00:01:14 ON 06/29/2011 - CRITICAL ERROR T
SYSVSSI      MSM
TCPIP        NETCONV
TSO          RODM
VLF          RODMLOAD
VTAM         SNA3_LITE
ZFS                       Gateway Message text /-**-\/-**-\/-**-\/-**-\/-**-\/-**-\/-**-\/-**-\/-**-\/-**-\/-**-\/-**-\/-**-\/-**-\/-**-\/-**-\/-**- 1/10(64)
BLSJPRMI                  IPSFMO  AOF568I 11:01:56 : STATUS OF IPSFP OUTBOUND GATEWAY TO DOMAIN IPSFM IS INACTIVE
IRRDPTAB                  IPSFNO  AOF568I 11:01:56 : STATUS OF IPSFP OUTBOUND GATEWAY TO DOMAIN IPSFN IS INACTIVE
SYSVIPLC                  IPSFOO  AOF568I 11:01:56 : STATUS OF IPSFP OUTBOUND GATEWAY TO DOMAIN IPSFO IS INACTIVE
CANKEY4                   IPSF7O  AOF568I 11:01:56 : STATUS OF IPSFP OUTBOUND GATEWAY TO DOMAIN IPSF7 IS INACTIVE
GMFHS                     IPUFAO  AOF568I 11:01:56 : STATUS OF IPSFP OUTBOUND GATEWAY TO DOMAIN IPUFA IS INACTIVE
IMS_DB_IRLM               IPUFBO  AOF568I 11:01:56 : STATUS OF IPSFP OUTBOUND GATEWAY TO DOMAIN IPUFB IS INACTIVE
                          IPUFCO  AOF568I 11:01:56 : STATUS OF IPSFP OUTBOUND GATEWAY TO DOMAIN IPUFC IS INACTIVE
Application Grou 1/20(44) IPUFDO  AOF568I 11:01:56 : STATUS OF IPSFP OUTBOUND GATEWAY TO DOMAIN IPUFD IS INACTIVE
SNA_X        IMS_SUPPORT  IPUFGO  AOF568I 11:01:56 : STATUS OF IPSFP OUTBOUND GATEWAY TO DOMAIN IPUFG IS INACTIVE
BASE_SUPP    IMSA_CSLMGR  IPUFHO  AOF568I 11:01:56 : STATUS OF IPSFP OUTBOUND GATEWAY TO DOMAIN IPUFH IS INACTIVE
BASE_SYS     IMS1_CTRL
BASE_USS     IMS2         Device Message text +++++++++++++++++++++++++++++++++++++++++++++++++++++++++++++++++++++++++++++++++++++++++++++++++++++++++ (0)
CICS         IMS2_CTRL
CICS_SHARED  IMS2_SUPORT
CPSM         LOOKASIDE
DB2          NETWORK
DB2_X        OMII_CICS
IMS          OMII_GROUP
                                                                        Applications in ERROR                                                        (0)
    Monitor Status        Date      Time      Subsystem    Message text
CICS1DB21    CICS45ABEND
C1TORDB21    CI41TRABEND
C1TORDB22    CI42TRABEND
C1TORDB23    CI43TRABEND
CICS1CON1    CI44TRABEND
CICS1CON2    CI45TRABEND
CICS41SOS    IMS1DC
CICS43SOS    IMS1OLDS1
CICS44ABEND  IMS1OLDS2
CICS44SOS    IMS2DC

 1=HELP       2=DETAIL     3=UP                             6=ROLL                                         10=PREVIOUS 11=NEXT     12=TOP
13=EXPLAIN   14=SDFCONF   15=INGMSGS 16=DISPGW    17=SETSTATE 18=INGVOTE 19=INGREQ    20=OPC               22=DISPMTR  23=INGLIST  24=INGINFO
                                                                                                           FU0U2044               006/007
```

zEnterprise support within ProcOps

zEnterprise support within ProcOps

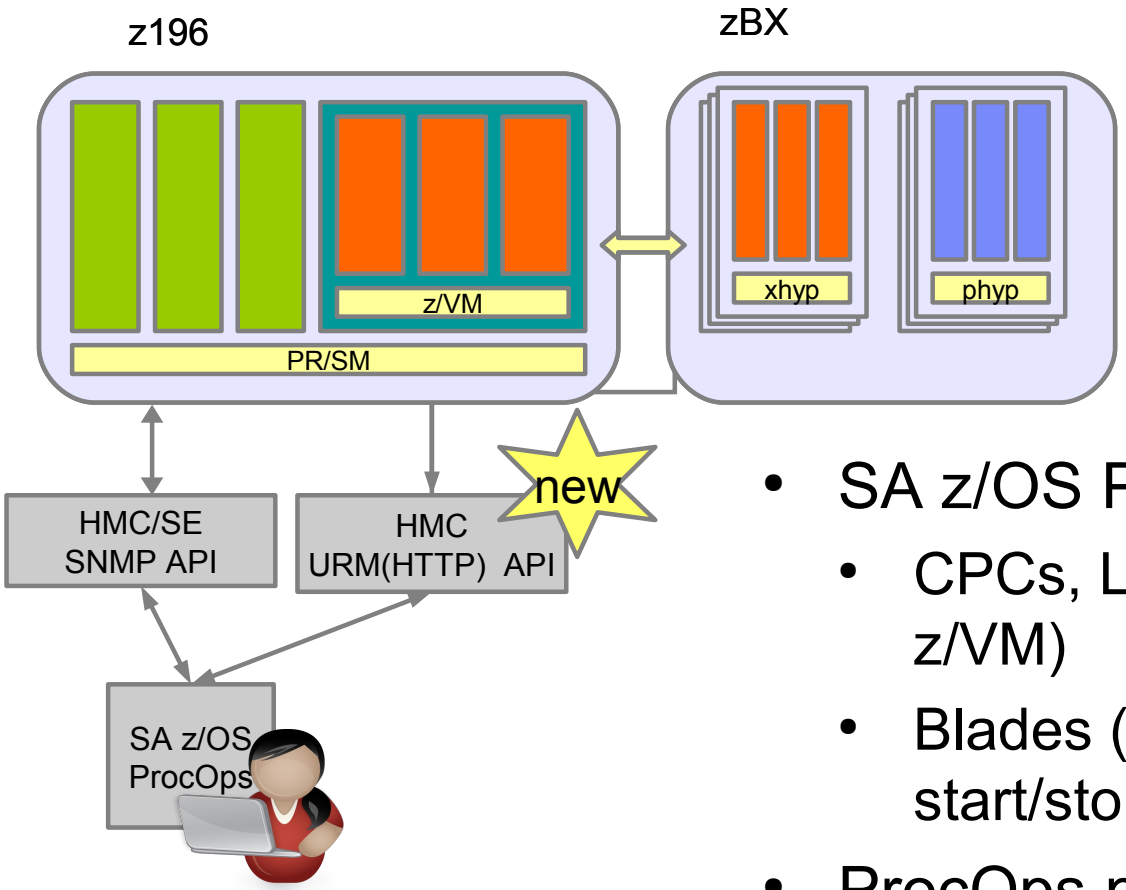

- SA z/OS ProcOps controls:
  - CPCs, LPARs, Systems (incl. z/VM)
  - Blades (incl. automated start/stop of Virtual Servers)
- ProcOps provides a command interface

Example: List + Activate Virtual Server

```
NV54 SA34 NM                Tivoli NetView    IPSN7 YDR       12/09/11 10:52:39
* IPSN7     ISQECMD ENSR35 LIST VS
U IPSN7     ISQ801I ENSR35 SC ISQ417I LIST STATUS(SUCCESS)
U IPSN7     ISQ801I ENSR35 SC AOFB0021 LIST ENSR35 STATUS(SUCCESS)
            TSTIME(111209105237)
U IPSN7     ISQ801I ENSR35 SC AOFB0021 ENSR35 CPC(R35) VH(C.1.12) TYPE(power-vm)
U IPSN7     ISQ801I ENSR35 SC AOFB0021 VS(cloudpocvs1)
U IPSN7     ISQ801I ENSR35 SC AOFB0021 ENSR35 CPC(R35) VH(C.1.12) TYPE(power-vm)
U IPSN7     ISQ801I ENSR35 SC AOFB0021 VS(cloudpocvs2)
U IPSN7     ISQ801I ENSR35 SC AOFB0021 ENSR35 CPC(R35) VH(C.1.13) TYPE(power-vm)
U IPSN7     ISQ801I ENSR35 SC AOFB0021 VS(pbxerictst1)
U IPSN7     ISQ801I ENSR35 SC AOFB0021 ENSR35 CPC(R35) VH(C.1.13) TYPE(power-vm)
```

```
NV54 SA34 NM                Tivoli NetView    IPSN7 YDR       12/09/11 15:33:30
* IPSN7     ISQECMD ENSR35 ACTIVATE VS NAME(SA34XSRV)
U IPSN7     ISQ801I ENSR35 SC ISQ417I ACTIVATE STATUS(SUCCESS)
U IPSN7     ISQ801I ENSR35 SC AOFB0001 ACTIVATE ENSR35 HMC(hmctrx)
            STATUS(ACCEPTED) TSTIME(111209153240)
U IPSN7     ISQ856I ISQECMD: ACTIVATE ENSR35 TSTIME(111209153240)
            STATUS(SUCCESS)
U IPSN7     ISQ801I ENSR35 AOFB0100 VS CLASS(virtual-server) CPC(R35)
            VH(C.1.02) NAME(SA34XSRV) TYPE(x-hyp) NEWSTATUS(starting)
            OLDSTATUS(not-operating)
U IPSN7     ISQ801I ENSR35 AOFB0100 VS CLASS(virtual-server) CPC(R35)
            VH(C.1.02) NAME(SA34XSRV) TYPE(x-hyp) NEWSTATUS(operating)
            OLDSTATUS(starting)
U IPSN7     ISQ801I ENSR35 AOFB0100 VS CLASS(virtual-server) CPC(R35)
            VH(C.1.01) NAME(sazbx111) TYPE(x-hyp) NEWSTATUS(starting)
            OLDSTATUS(not-operating)
U IPSN7     ISQ801I ENSR35 AOFB0300 VS CLASS(virtual-server) CPC(R35)
            VH(C.1.02) NAME(SA34XSRV) TYPE(x-hyp) JOB(ACTIVATE VS)
            STATUS(complete) CODE(200) REASON(0) ERROR(*)
-------------------------------------------------------------------------------
```

'ISQXDST *ensemble_name*' command showing zBX Info….

```
ISQEZBX          SA z/OS Proc-Ops zBX Base Operation Blade View
                  Ensemble / THW Node Member: GRY2ZBX / GRY2
    --- Rack B  ---    --- Rack C  ---    --- Rack D  ---    --- Rack E  ---
    B.1     B.2        C.1     n/a        n/a     n/a        n/a     n/a
    =x= ... =p= ...    ... ... ... ...    ... ... ... ...    ... ... ... ...
    =x= ... =p= ...    ... ... ... ...    ... ... ... ...    ... ... ... ...
    =p= ... =x= ...    ... ... ... ...    ... ... ... ...    ... ... ... ...
    =p= ... =x= ...    ... ... ... ...    ... ... ... ...    ... ... ... ...
    =p= ... =x= ...    ... ... ... ...    ... ... ... ...    ... ... ... ...
    ... ... =x= ...    ... ... ... ...    ... ... ... ...    ... ... ... ...
    ... ... =p= ...    ... ... ... ...    ... ... ... ...    ... ... ... ...
    ... ... ... ...    ... ... ... ...    ... ... ... ...    ... ... ... ...
    ... ... ... ...    ... ... ... ...    ... ... ... ...    ... ... ... ...
    ... ... ... ...    ... ... ... ...    ... ... ... ...    ... ... ... ...
    ... ... ... ...    ... ... ... ...    ... ... ... ...    ... ... ... ...
    ... ... ... ...    ... ... ... ...    ... ... ... ...    ... ... ... ...
    ... ... ... ...    ... ... ... ...    ... ... ... ...    ... ... ... ...
 AOFB0016 BLDATA GRY2ZBX STATUS(SUCCESS) TSTIME(120924182738) GRY2ZBX
 CPC(GRY2) BL NAME(B.1.01) MTYPE(7873) MMODEL(A1G) MSERIAL(06DCG00)
 TYPE(system-x) LOCKD(false) STAT(operating) ACCSTAT(operating)
 UNACCSTAT(false) HASHWMSG(false) LOC(B10BBS01) PCO(232) PROC(2) MEM(131072)
 VH NAME(B.1.01) VH TYPE(x-hyp)
PF1=Hlp PF2=Report PF3=Exit PF4=Act PF5=Deact PF6=Roll PF9=Show/Refr PF12=Quit
```

Auto Discovery

Auto Discovery

- Simplifies & accelerates the PDB creation using predefined and proven models
- Gathers data about a customer system environment
  - All address spaces incl USS processes
  - XCF Groups & ARM Groups
- Generates PDB leveraging SA's best practice policies
  - Allows manual adjustments
  - Allows refine + extend the model process

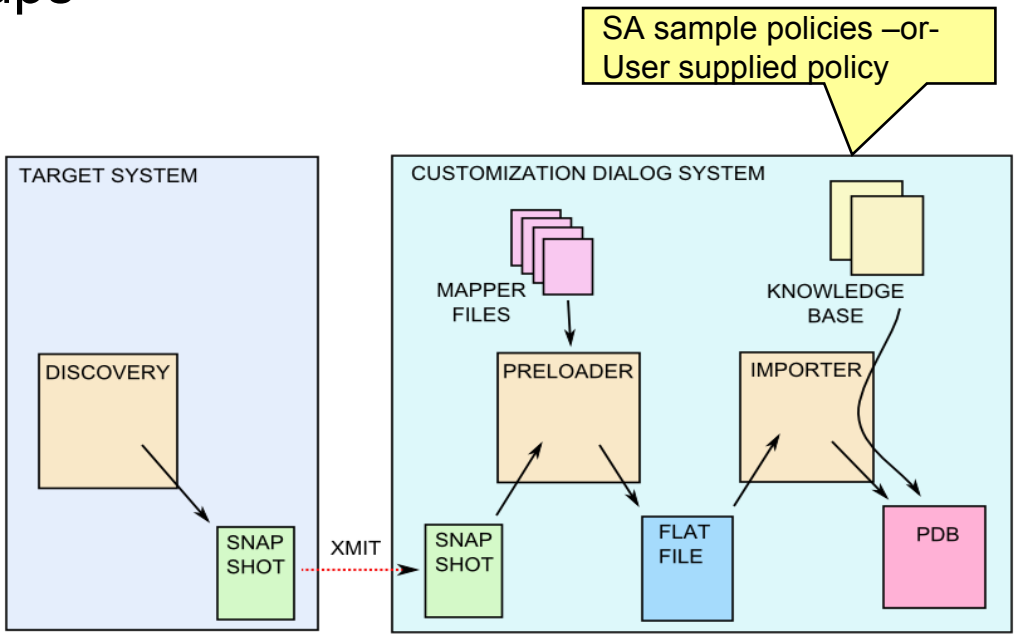

Extended Status Commands

Extended Status Commands

Provider Application:
(e.g.TCPIP)

Consumer Application:
(e.g. WebSphere MQ)

MESSAGES/USER DATA:
Msg ID:
ISUP_TCPIP or

ISDN_TCPIP
Command: your_cmd

- Commands are executed for a 'consumer' application reaching the UP status when the 'provider' application is either in an UP or a DOWN state.

JobLog Monitoring

JobLog Monitoring

Monitors JES2 spool data sets: default JESMSGLG

- Monitor interval 1 s –1h → Application Info policy
- Message specification → Message/UserData policy

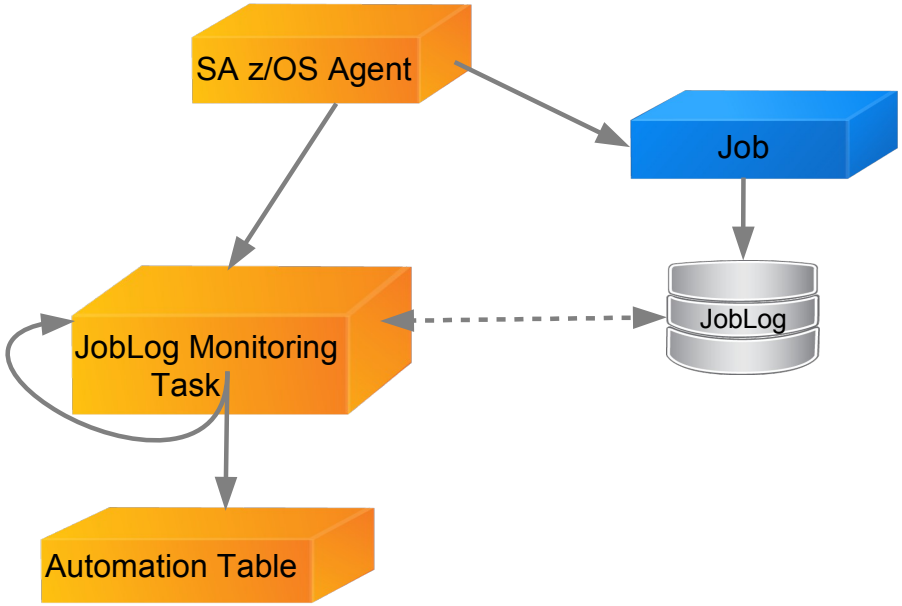

File Update Enhancements

File Update Enhancements

- MVC, SYS and GRP entry types can be updated
- WHERE_USED links can be added to existing entries
- Existing APLs can be linked to a class (LINK_TO_CLASS)
- New Option to generate NEW & DEL structures for ALL entry types

```
                    Policy Database Update Selection
Option ===> 6

  1 Write selected data from Policy Database to file
       Entry Type . . . . . . . APL                    (? or type)
       Output File Name . . . . 'THIE.IMS.WORK.PDB.UPD'

  2 Perform syntax check for data in file
  3 Update Policy Database with data from file
       Input File Name. . . . . 'THIE.IMS.WORK.PDB.UPD'
       Mode . . . . . . . . . . ONLINE                 (ONLINE BATCH)

  4 View write / update report

  5 Edit output file

  6 Append NEW/DEL templates to output file
```

Visit our home pages at

Automation Control for z/OS:

http://www-03.ibm.com/software/products/us/en/ibm-automation-control-for-zos

System Automation for z/OS:

http://www-01.ibm.com/software/tivoli/products/system-automation-zos/index.html

Visit our Wikis at

Automation Control for z/OS:

Link to Automation Control Wiki

System Automation for z/OS:

Link to System Automation for z/OS Wiki

our Community at

IBM Service Management Connect

https://www.ibm.com/developerworks/servicemanagement/z/index.html

or our User forums at

Automation Control for z/OS: IBM Service Management Connect

https://www.ibm.com/developerworks/community/forums/html/forum?id=29e48eab-e754-4aec-ad15-a3d01d4035bd

*The purpose of this group is to discuss technical issues related to **IBM Automation Control for z/OS** with your peers.*

System Automation for z/OS: Yahoo

http://groups.yahoo.com/group/SAUSERS/

*The purpose of this group is to discuss technical issues related to **IBM Tivoli System Automation for z/OS** with your peers.*


Thank
You