SmarterComputing

The World of z/OS Dispatching on the zEC12 Processor

Glenn Anderson, IBM Lab Services and Training

Summer SHARE 2013
Session 14040

What I hope to cover.....

- What are dispatchable units of work on z/OS
- How WLM manages dispatchable units of work
- The role of HiperDispatch
- Dispatching work to zIIP and zAAP engines
- RMF Work Unit Analysis Report

z/OS Dispatchable Units

- **There are different types of Dispatchable Units (DU's) in z/OS**
  - Preemptible Task (TCB)
  - Non Preemptible Service Request (SRB)
  - Preemptible Enclave Service Request (enclave SRB)
    - Independent - a new transaction
    - Dependent – extend existing address space
    - Work-dependent – extend existing independent enclave

z/OS Dispatching Work

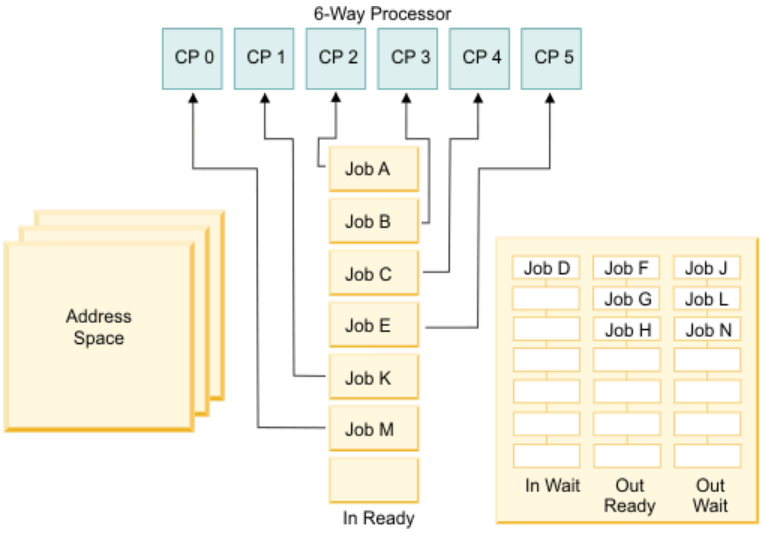

What is a WLM Transaction?

- **A WLM transaction represents a WLM "unit of work"**
  - basic workload entity for which WLM collects a resource usage value
  - foundation for statistics presented in workload activity report
  - represents a single subsystem "work request"
- **Subsystems can implement one of three transaction types**
  - **Address Space:**
    - WLM transaction measures all resource used by a subsystem request in a **single address space**
    - Used by JES (a batch job), TSO (a TSO command), OMVS (a process), STC (a started task) and ASCH (single APPC program)
  - **Enclave:**
    - Enclave created and destroyed by subsystem for each work request
    - WLM transaction measures resources used by a single subsystem request across **multiple address spaces and systems**
    - Exploited by subsystems - Component Broker(WebSphere), DB2, DDF, IWEB, MQSeries Workflow, LDAP, NETV, TCP
  - **CICS/IMS Transactions**
    - Neither address space or enclave oriented - special type
    - WLM transaction measures resource used by a single CICS/IMS transaction program request

The WLM View

Address Spaces, and the transactions inside

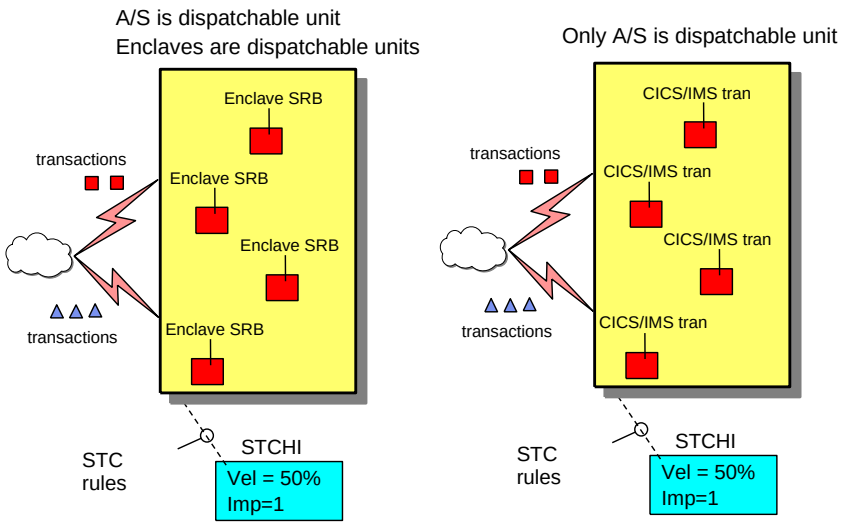

DDF and Enclave SRBs

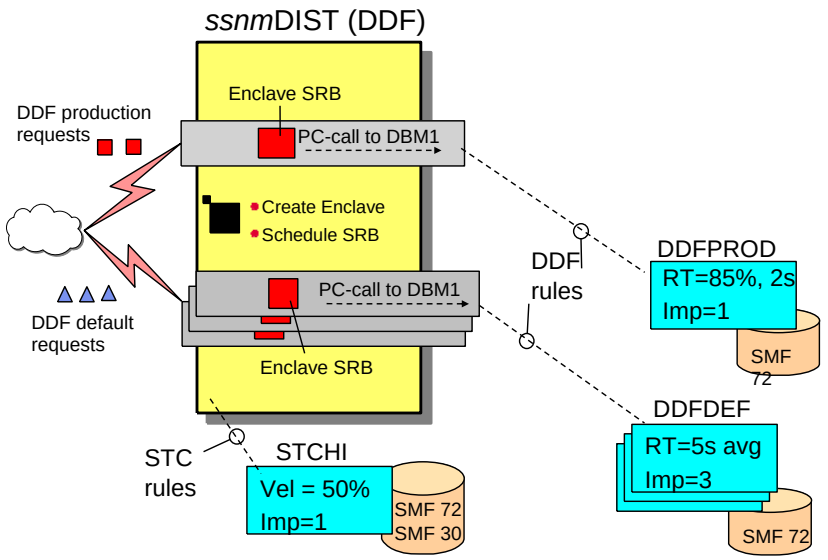

WLM Policy Adjustment Algorithm

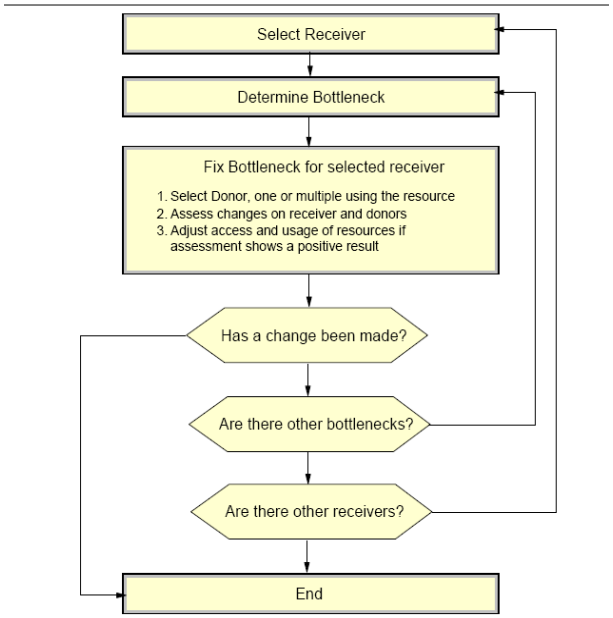

WLM Dispatching Priority Usage

255	SYSTEM
254	SYSSTC
253	*Small Consumer*
252 208	Priorities for dynamic policy adjustment
207 202	Not used
201 192	Discretionary work Mean Time to wit algorithm

WLM CPU Management Example

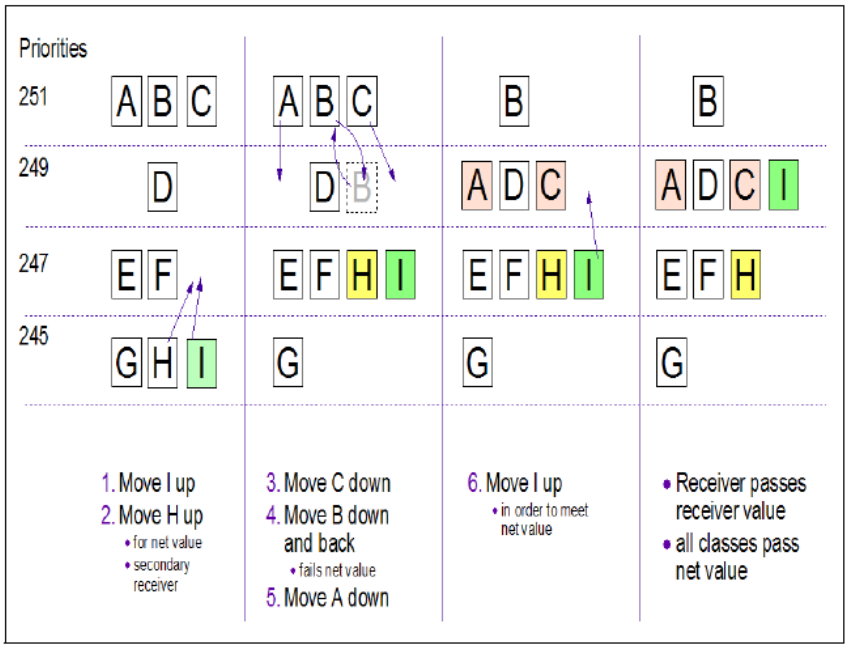

WLM Blocked Workload Support: IEAOPTxx

BLWLTRPCT	**Percentage of the CPU capacity of the LPAR to be used for promotion** • **Specified in units of 0.1%** • **Default is 5 (=0.5%)** • **Maximum is 200 (=20%)** • **Would only be spent when enough units of work exist which need promotion**
BLWLINTHD	**Specifies threshold time interval for which a blocked address space or enclave must wait before being considered for promotion.** •**Minimum is 5 seconds. Maximum is 65535 seconds.** •**Default is 20 seconds.**

11

Blocked Workload Support: User Interface: RMF

```
                                    C P U   A C T I V I T Y
…

BLOCKED WORKLOAD ANALYSIS

OPT PARAMETERS: BLWLTRPCT (%)   0.5   PROMOTE RATE:  DEFINED    50000   WAITERS FOR PROMOTE:  AVG   0.001
                BLWLINTHD        60                  USED (%)      95                         PEAK     15
```

- **Extensions of RMF Postprocessor CPU Activity and WLMGL reports with information about blocked workloads and the temporary promotion of their dispatching priority**
- **SMF record 70-1 (CPU activity) and SMF 72-3 (Workload activity)**

```
                                W O R K L O A D   A C T I V I T Y
                                                                                                                PAGE   1
   z/OS V1R13              SYSPLEX SVPLEX3            DATE 09/28/2011          INTERVAL 15.00.003   MODE = GOAL
                           RPT VERSION V1R13 RMF      TIME 17.00.00

                                   POLICY ACTIVATION DATE/TIME 09/14/2011 11.08.09

-------------------------------------------------------------------------------------------------------------------- SERVICE CLASS(ES)

 REPORT BY: POLICY=BASEPOL    WORKLOAD=STC_WLD    SERVICE CLASS=STCLOW     RESOURCE GROUP=*NONE
                                                  CRITICAL     =NONE
                                                  DESCRIPTION  =Low priority for STC workloads

 -TRANSACTIONS-  TRANS-TIME HHH.MM.SS.TTT  --DASD I/O--  ---SERVICE---   SERVICE TIME  ---APPL %---  --PROMOTED--  ----STORAGE----
 AVG     153.37  ACTUAL         3.02.885  SSCHRT  56.9  IOC      3964   CPU  805.697  CP     92.24  BLK    1.489  AVG     1195.43
 MPL     152.35  EXECUTION      3.02.391  RESP    15.1  CPU     15184K  SRB   13.850  AAPCP   0.00  ENQ    0.046  TOTAL  182122.4
 ENDED      599  QUEUED             494  CONN     1.3  MSO        0    RCT    9.995  IIPCP   0.00  CRM    5.593  SHARED   230.59
 END/S     0.67  R/S AFFIN            0  DISC     0.3  SRB    261005   IIT    0.576                LCK    0.000
 #SWAPS    3391  INELIGIBLE           0  Q+PEND   4.5  TOT     15449K  HST    0.000  AAP     0.00  SUP    0.000  -PAGE-IN RATES-
 EXCTD        0  CONVERSION         5.188  IOSQ     9.0  /SEC    17202  AAP    0.000  IIP     0.00                SINGLE      0.0
 AVG ENC   0.00  STD DEV          3.27.429                              IIP    0.000                                BLOCK       0.0
 REM ENC   0.00                                            ABSRPTN   113                                            SHARED      0.0
 MS ENC    0.00                                            TRX SERV  112                                            HSP         0.0

 ----------------------------------------------SERVICE CLASSES BEING SERVED----------------------------------------------------
 DB2LOW
```



```
SERVICE TIME   ---APPL %---   --PROMOTED--   ----STORAGE----
CPU   805.697  CP      92.24  BLK     1.489  AVG     1195.43
SRB    13.850  AAPCP    0.00  ENQ     0.046  TOTAL  182122.4
RCT     9.995  IIPCP    0.00  CRM     5.593  SHARED   230.59
IIT     0.576                 LCK     0.000
HST     0.000  AAP      0.00  SUP     0.000  -PAGE-IN RATES-
AAP     0.000  IIP      0.00                 SINGLE      0.0
IIP     0.000                                BLOCK       0.0
                                             SHARED      0.0
                                             HSP         0.0

RVED-----------------------------------------------------------
```

Promoted

CPU time in seconds that transactions in this group were running at a promoted dispatching priority, separated by the reason for the promotion:

BLK CPU time in seconds consumed while the dispatching priority of work with low importance was temporarily raised to help blocked workloads
ENQ CPU time in seconds consumed while the dispatching priority was temporarily raised by enqueue management because the work held a resource that other work needed.
CRM CPU time in seconds consumed while the dispatching priority was temporarily raised by chronic resource contention management because the work held a resource that other work needed
LCK In HiperDispatch mode, the CPU time in seconds consumed while the dispatching priority was temporarily raised to shorten the lock hold time of a local suspend lock held by the work unit.
SUP CPU time in seconds consumed while the dispatching priority for a work unit was temporarily raised by the z/OS supervisor to a higher dispatching priority than assigned by WLM.

Dispatching in an LPAR Environment

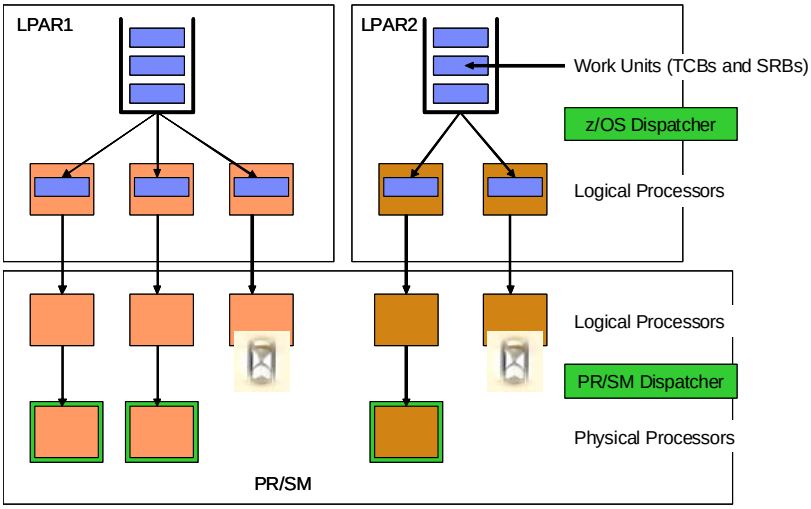

HiperDispatch Introduction

- Design Objective
  - Keep work as much as possible local to a physical processor to optimize the usage of the processor caches
  - As a result systems with high number of physical processors provide a much better scalability
- Function: HiperDispatch
  - Interaction between z/OS and the PR/SM Hypervisor to optimize work unit and logical processor placement to physical processors
  - Consists of 2 parts
    - In z/OS (sometimes referred as Dispatcher Affinity)
    - In PR/SM (sometimes referred as Vertical CPU Management)

17

HiperDispatch Mode

- PR/SM
  - Supplies topology information/updates to z/OS
  - Ties *high priority* logicals to physicals (gives 100% share)
  - Distributes remaining share to *medium priority* logicals
  - Distributes any additional service to unparked *low priority* logicals
- z/OS
  - Ties tasks to small subsets of logical processors
  - Dispatches work to *high priority* subset of logicals
  - Parks *low priority* processors that are not need or will not get service

HiperDispatch: z/OS Part

- z/OS obtains the logical to physical processor mapping in Hiperdispatch mode
  - Whether a logical processor has high, medium or low share
  - On which book the logical processor is located
- z/OS creates dispatch nodes
  - The idea is to have 4 high share CPs in one node
  - Each node has TCBs and SRBs assigned to the node
  - Optimizes the execution of work units on z/OS

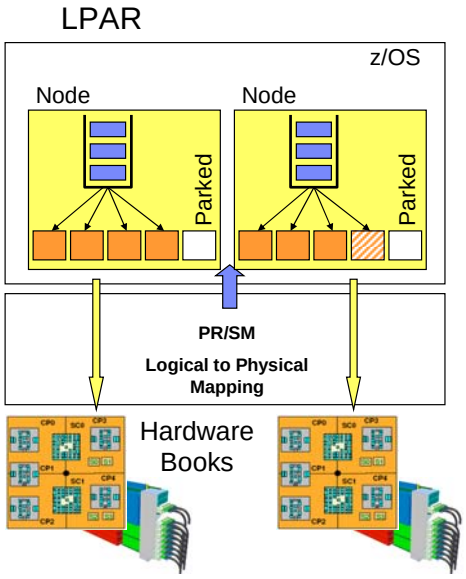

19

HiperDispatch: z/OS Affinity Dispatching

- Affinity dispatching
  - WLM balances the units of work (TCBs/SRBs) across the nodes to equalize the utilization of nodes
    - And to assure that each node has work of different priorities
  - Balancing takes place every 2 seconds
  - For unbalanced situations in between
    - WLM creates lists of helper nodes for each node
    - These helper nodes can be asked to select work from a given node in cases the node is overloaded
    - Helper nodes are sorted to avoid book crossing if possible
- Low share processors
  - WLM parks and un-parks these processors based on demand and utilization of the CEC

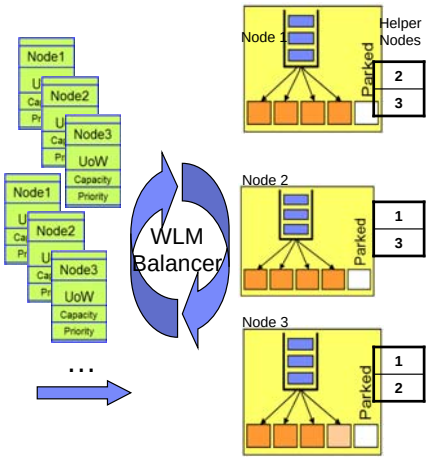

20

RMF CPU Activity Report

```
1                                                  C P U   A C T I V I T Y

                z/OS V1R11                SYSTEM ID Z2                START 09/11/2009-02.30.00  INTERVAL 000.30.00
                                          RPT VERSION V1R11 RMF       END   09/11/2009-03.00.00  CYCLE 0.100 SECONDS
-CPU  2097   MODEL  737   H/W MODEL  E56  SEQUENCE CODE 00000000000699FF    HIPERDISPATCH=YES
0---CPU---    ---------------- TIME % ----------------      LOG PROC       --I/O INTERRUPTS--
 NUM  TYPE    ONLINE    LPAR BUSY    MVS BUSY   PARKED      SHARE %        RATE     % VIA TPI
  0    CP     100.00     96.60       96.74       0.00      100.0  HIGH     1593      2.64
  1    CP     100.00     97.51       97.69       0.00      100.0  HIGH     1607      2.73
  2    CP     100.00     96.02       96.23       0.00       96.0  MED      5.12     29.30
  3    CP     100.00     39.26       80.81      51.23        0.0  LOW      0.00      0.00
  4    CP     100.00     48.71       79.90      38.77        0.0  LOW      0.00      0.00
  5    CP     100.00     41.06       79.34      48.01        0.0  LOW      0.00      0.00
  6    CP     100.00     12.42       78.35      84.11        0.0  LOW      0.00      0.00
  7    CP     100.00      0.00       -----     100.00        0.0  LOW      0.00      0.00
  8    CP     100.00      0.00       -----     100.00        0.0  LOW      0.00      0.00
  9    CP     100.00     33.05       80.34      58.68        0.0  LOW    199.6      1.01
 TOTAL/AVERAGE           46.46       89.73                  296.0          3405      2.62
0 A    AAP    100.00     57.35       88.68       0.00       32.0  MED
  B    AAP    100.00     46.71       92.85      17.56        0.0  LOW
  C    AAP    100.00     45.27       90.82      17.79        0.0  LOW
  D    AAP    100.00     53.81       85.00       0.00        0.0  LOW
 TOTAL/AVERAGE           50.78       89.09                   32.0
0 E    IIP    100.00      0.26        0.26       0.00       16.2  MED
  F    IIP    100.00      0.01        0.01       0.00        0.0  LOW
 TOTAL/AVERAGE            0.13        0.13                   16.2
```

HiperDispatch and LPAR

```
1                                        P A R T I T I O N   D A T A   R E P O R T
                                                                                                                  PAGE    3
            z/OS V1R10              SYSTEM ID LPAR1            DATE 04/29/2011            INTERVAL 14.59.998
                                CONVERTED TO z/OS V1R12 RMF    TIME 19.28.00              CYCLE 1.000 SECONDS
-
 MVS PARTITION NAME                 LPAR1          NUMBER OF PHYSICAL PROCESSORS          55                GROUP NAME       N/A
 IMAGE CAPACITY                      3165                CP                                 53                LIMIT            N/A
 NUMBER OF CONFIGURED PARTITIONS        4                IIP                                 2                AVAILABLE        N/A
 WAIT COMPLETION                       NO
 DISPATCH INTERVAL                DYNAMIC
-
--------- PARTITION DATA ----------------  -- LOGICAL PARTITION PROCESSOR DATA --   -- AVERAGE PROCESSOR UTILIZATION PERCENTAGES --
                   ----MSU----  -CAPPING--  PROCESSOR-  ----DISPATCH TIME DATA----   LOGICAL PROCESSORS  --- PHYSICAL PROCESSORS ---
 NAME       S   WGT  DEF    ACT  DEF   WLM%  NUM   TYPE   EFFECTIVE       TOTAL      EFFECTIVE    TOTAL  LPAR MGMT  EFFECTIVE  TOTAL
 LPAR1      A   494    0    582  NO     0.0 32.0   CP    02.17.24.319  02.20.44.154      28.63    29.32      0.44      17.96  18.40
 LPAR2      A   446    0    762  NO     0.0 32.0   CP    03.01.28.607  03.04.05.167      37.81    38.35      0.34      23.72  24.06
 LPAR3      A    59    0      0  NO     0.0  3.0   CP    00.00.00.000  00.00.00.000       0.00     0.00      0.00       0.00   0.00
 LPAR5      A     1    0      0  NO     0.0  1.0   CP    00.00.00.000  00.00.00.000       0.00     0.00      0.00       0.00   0.00
 *PHYSICAL*                                             00.10.58.833                                            1.44                1.44
                                                       ------------  ------------                            -----      -----  -----
   TOTAL                                               05.18.52.927  05.35.48.155                             2.21      41.68  43.90
```

Total LPAR weight = 1000
LPAR1 494/1000 = .494 * 53 CPs = 26.18 CPs
LPAR2 446/1000 = .446 * 53 CPs = 23.64 CPs

LPAR1 = 25 VH and 2 VM at 59% share (27 logicals unparked)
LPAR2 = 23 VH and 1 VM at 64% share (24 logicals unparked)

51 logicals unparked

53 physicals

Need to deactivate unused LPARs to reallocate their weight to VH and VM logicals

Warning Track

- In a PR/SM™ environment the LPAR hypervisor assigns physical engines to logical engines accordingly to the weighting factors of the partitions.
- Once the time slice for a logical engine is expired the currently executing work is suspended until a physical engine is assigned to the logical engine again.
- The Warning Track Interruption Facility notifies the operating system that PR/SM™ will undispatch a certain logical processor within the next 50 microseconds (grace period).
- z/OS is now able to save status for the running unit of work and re-dispatch the work unit on a different logical processor within the grace period.
- z/OS now signals to PR/SM via Diagnose x'9C' that the logical processor can be un-dispatched.
- Warning Track processing is only supported in HyperDispatch=YES environments.
- A high benefit can be achieved for Low Share processors which might be parked by WLM.

Warning Track

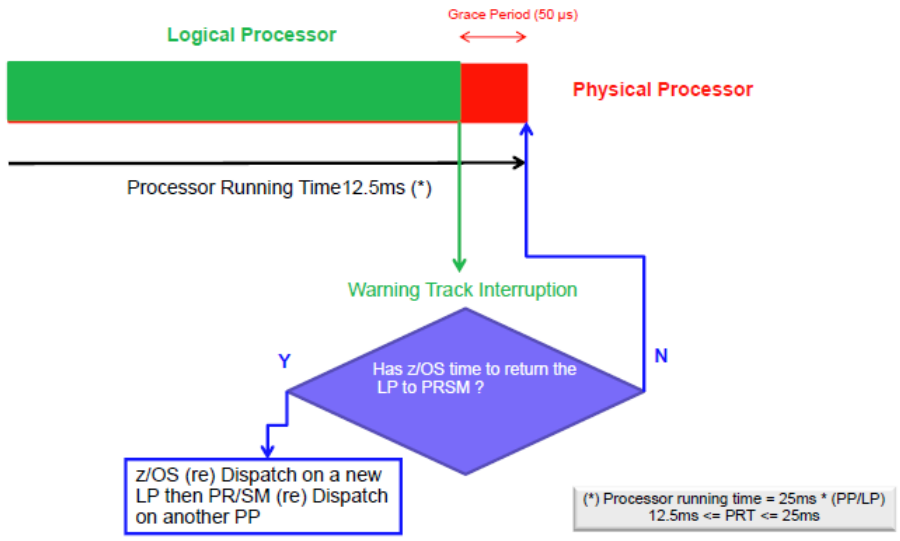

Warning Track Statistics

- RMF keeps track of the number of times PR/SM issued a warning-track interruption to a logical processor and z/OS was able/unable to return the logical processor within the grace period.
- RMF measures the amount of time in microseconds that a processor was yielded to PR/SM due to Warning-track processing.

OA37803

SMF record type 70 subtype 1 (CPU Activity) – CPU data section				
Offset	Name	Length	Format	Description
80 x50	SMF70WTS	4	Binary	The number of times PR/SM issued a warning-track interruption to a logical processor and z/OS was able to return the logical processor within the grace period.
84 x54	SMF70WTU	4	Binary	The number of times PR/SM issued a warning-track interruption to a logical processor and z/OS was unable to return the logical processor within the grace period.
88 x58	SMF70WTI	4	Binary	Amount of time in microseconds that a logical processor was yielded to PR/SM due to Warning Track processing.

RMF Postprocessor Overview Conditions		
Name	Qualifier	Description
WTRKCP (WTRKAAP) (WTRKIIP)	cpu-id	The percentage of times PR/SM issued a warning-track interruption to a processor and z/OS was able to return it to PR/SM within the grace period.
WTRKTCP (WTRKTAAP) (WTRKTIIP)	cpu-id	Time in microseconds that a purpose processor was yielded to PR/SM due to Warning Track processing.

IBM System z Application Assist Processor (zAAP)

Specialty assist processor dedicated exclusively to execution of Java workloads under z/OS® – e.g. WebSphere®, CICS, IMS, DB2

- Available on IBM zEnterprise 196 and 114, IBM System z10, IBM System z9 and zSeries z990 and z890
- Used by any workload with Java cycles, e.g. WebSphere, CICS, Batch, DB2®,
- Executes Java code with no changes to applications
- ***Objective: Enable integration of new Java based Web applications with core z/OS backend database environment for high performance, reliability, availability, security, and lower total cost of ownership***

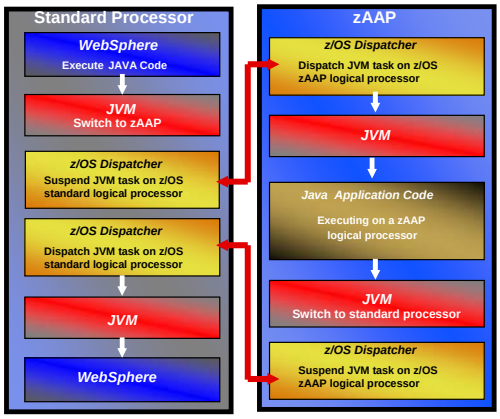

IBM System z Integrated Information Processor (zIIP)

Specialty assist processor dedicated exclusively to execution of any workloads under z/OS®r

- Available on IBM zEnterprise 196 and 114, IBM System z10, IBM System z9
- Requires work to be run as an enclave SRB
- Exploiters work with z/OS to determine how much capacity should be redirected to a zIIP
- Exploiters must use licensed interface to enable exploitation

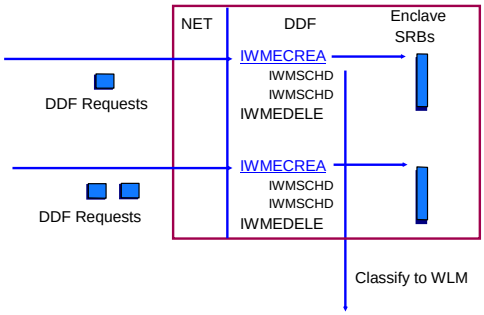

Current IBM Exploitation of zAAPs and zIIPs

Specialty CP	Eligible	Major Users
zAAP	Any Java Execution	Websphere CICS Native apps XMLSS
zIIP	Enclave SRBs	DRDA over TCPIP DB2 Parallel Query DB2 Utilities Load, Reorg, Rebuild DB2 V9 z/OS remote native SQL procedures TCPIP - IPSEC XMLSS zIIP Assisted HiperSockets Multiple Write Virtual Tape Facility Mainframe (VTFM) Software z/OS Global Mirror (XRC), System Data Mover (SDM) z/OS CIM Server

What is "Needs Help"

- Determination zIIP or zAAP work is being delayed and additional resources should help process the work
  - Requires xxPHONORPRIORITY=YES to be set
- If help is required:
  - The zxxP CP signals waiting zxxP to help
  - When all zxxP CPs are busy the zxxP asks for help from the GCP
    - All available speciality engines (of the same type) must be busy before help is asked of the GCPs
      - IF the zxxPs needs help and all zxxPs are busy help is obtained from 1 GCP
      - IF zxxPs continue to need help additional CPs may be asked to help
  - Help is always provided in dispatch priority order

Specialty CP work running in a WLM Service Class

```
REPORT BY: POLICY=WLMPOL     WORKLOAD=BAT_WKL    SERVICE CLASS=BATSPEC    RESOURCE GROUP=BATMAXRG
TRANSACTIONS   TRANS-TIME HHH.MM.SS.TTT  --DASD I/O--  ---SERVICE----  SERVICE TIMES  ---APPL %---
AVG      0.98  ACTUAL             6.520  SSCHRT  11.5  IOC      8326   CPU      24.7   CP       0.97
MPL      0.98  EXECUTION          6.128  RESP     7.0  CPU    662386   SRB       0.0   AAPCP    0.01
ENDED      10  QUEUED               391  CONN     6.9  MSO         0   RCT       0.0   IIPCP    0.00
END/S    0.17  R/S AFFIN              0  DISC     0.0  SRB       965   IIT       0.0
#SWAPS      0  INELIGIBLE             0  Q+PEND   0.1  TOT    671677   HST       0.0   AAP     40.27
EXCTD       0  CONVERSION             0  IOSQ     0.0  /SEC    11195   AAP      24.2   IIP      0.00
AVG ENC  0.00  STD DEV                0                                IIP       0.0

 GOAL: EXECUTION VELOCITY 35.0%     VELOCITY MIGRATION:   I/O MGMT  99.2%     INIT MGMT 92.2%

          RESPONSE TIME EX   PERF  AVG   ------ USING% ----- ------------ EXECUTION DELAYS % -------
-
SYSTEM                  VEL% INDX ADRSP   CPU  AAP  IIP  I/O  TOT  CPU

SYSD        --N/A--     99.2  0.4   1.0   0.8 45.9  0.0  3.9  0.4  0.4
```

RMF report is at 1 minute interval

Queuing Impacts of Server Busy

	1 CP	2 CP	3 CP	4 CP
1	0.1010	0.1000	0.1000	0.1000
10	0.1111	0.1010	0.1001	0.1000
20	0.1250	0.1042	0.1010	0.1003
30	0.1429	0.1099	0.1033	0.1013
40	0.1667	0.1190	0.1078	0.1038
50	0.2000	0.1333	0.1158	0.1087
60	0.2500	0.1563	0.1296	0.1179
70	0.3333	0.1961	0.1547	0.1357
80	0.5000	0.2778	0.2079	0.1746
90	1.0000	0.5263	0.3724	0.2969
99	10.0000	5.0251	3.3706	2.5448

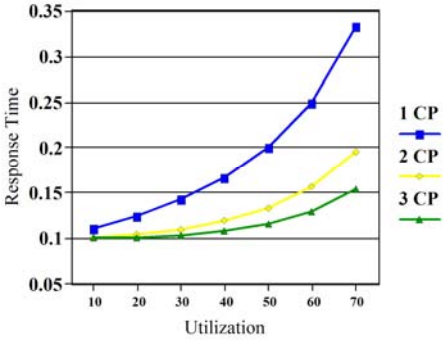

- xxPHonorpriority=NO is a valid method of running Specialty CPs
- Arrival rates and Server busy will influence IIPCP/AAPCP time
- Can run Specialty CPs very busy IF there are multiple classes of work with different response time objectives

zAAPs on zIIPs

- When a processor has no zAAPs installed but the LPAR has zIIP(s), treat zAAP-eligible work instead as zIIP-eligible work
  - Exception: Under z/VM can define a guest without zAAPs, on a processor with zAAPs, to allow testing
- IEASYSxx system parm indicates whether zAAP on zIIP is enabled
  - ZZ=NO | YES for z/OS 1.9 and z/OS 1.10
  - ZAAPZIIP=NO | YES for z/OS 1.11 (also supports alias of ZZ)
  - The enablement state of zAAP on zIIP cannot be changed after IPL
- Timing fields within SMF will show offload time under zIIP if a zIIP is installed
  - No method to determine what portion of zIIP time originated due to a zAAP request
  - Accounting and Capacity planning may need updating to use zIIP field
- New operator command in z/OS R12 to display ZIIPZAAP eligibility
- New planning White Paper WP101642

DB2 Parallel Query, Enclave SRBs and zIIPs

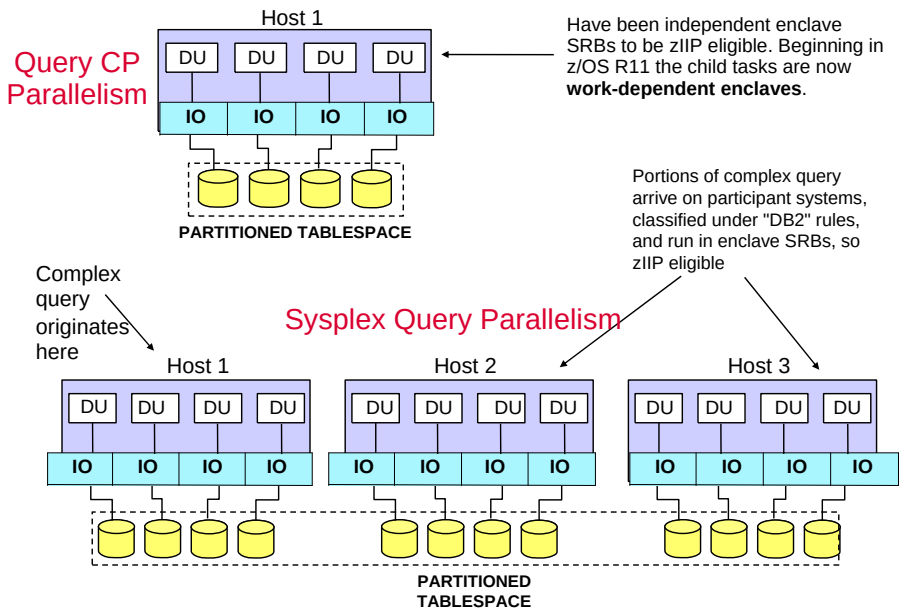

DB2 Parallelism, WLM, and zIIPs

- DB2 Parallelism and zIIPs
  - Controlled by a CPU threshold. Once the threshold is met all child tasks are zIIP eligible
  - Parents are not zIIP eligible
  - Parent and child CPU time contribute to the CPU Threshold
  - Can see any kind of work, CICS, IMS, TSO, batch using zIIP resources
- DB2 will use new Work-Dependent Enclaves for Child tasks
  - APAR OA26104 for releases 1.8 and beyond
  - Without new Work Dependent Enclave support parallel enclaves must be classified using subsystem DB2
    - Unclassified work would wind up in SYSOTHER

Work-Dependent Enclaves

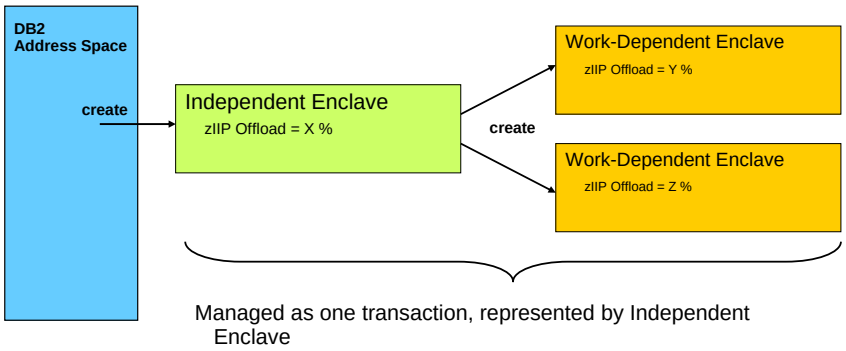

Implement a new type of enclave named "Work-Dependent" as an extension of an Independent Enclave. A Work-Dependent enclave becomes part of the Independent Enclave's transaction but allows to have its own set of attributes (including zIIP offload percentage)

DDF and Work-dependent Enclaves

In cases where DRDA applications create extended duration work threads in DB2, for example through extensive use of held cursors, the zIIP utilization levels can become more variable. DB2 and DDF now may use **work-dependent enclaves** in this situation to control this variability. See APAR PM28626.

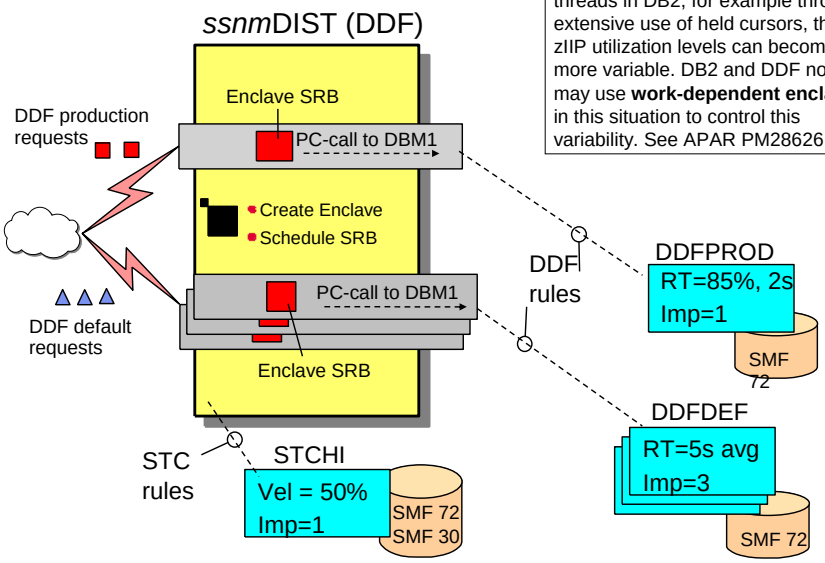

Work-dependent Enclaves in SDSF

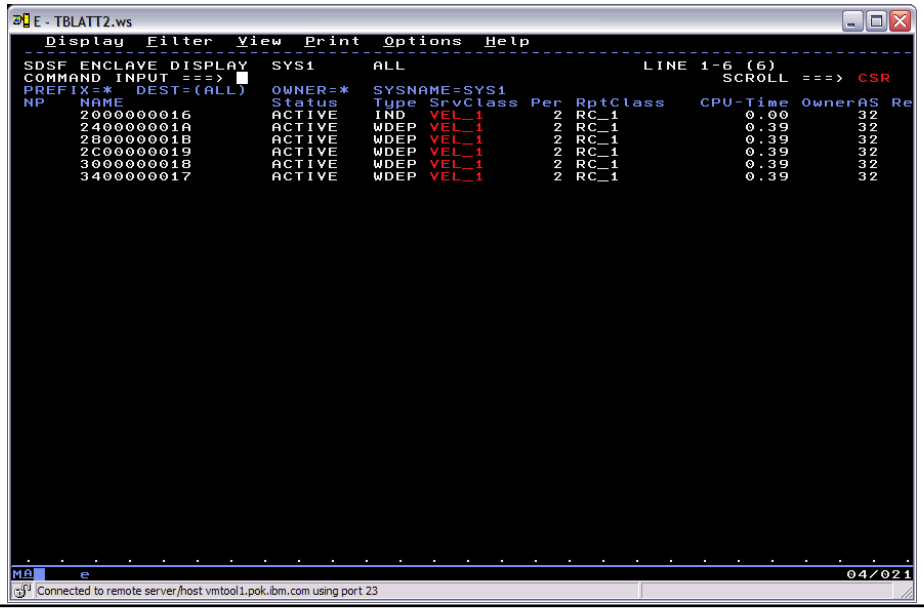

Statement of Direction

- zEC12 is planned to be last System z server to offer support for zAAP
- Continued support for zAAP on zIIP
- Remove restriction for zAAP on zIIP when zAAP installed on server
  - APAR OA38829 on z/OS R12 and R13

July 2013 zIIP/zAAP Announcement

- Effective July 23, 2013, IBM has modified the ratio of zIIP/zAAPs to CPs to be 2:1 for a zEC12 and/or zBC12. Customers may purchase up to two zIIP and/or up to two zAAP processors for every general purpose processor they purchase on the server. For the z196 and z114 and earlier servers, the 1:1 ratio will still be enforced; customers may purchase one zIIP and/or one zAAP for every general purpose processor they purchase on the server.

Work Unit Queue Distribution – Monitor I CPU Report

```
SYSTEM ADDRESS SPACE AND WORK UNIT ANALYSIS
  ---------NUMBER OF ADDRESS SPACES---------
  QUEUE TYPES            MIN      MAX      AVG

  IN                     550    1,008    594.8
  IN READY                 4      438     22.7
  OUT READY                0        1      0.0
  OUT WAIT                 0        0      0.0
  LOGICAL OUT RDY          0      628     10.3
  LOGICAL OUT WAIT       178      634    589.4

  ADDRESS SPACE TYPES

  BATCH                  281      284    282.0
  STC                    708      763    736.4
  TSO                     97       98     97.9
  ASCH                     0        1      0.0
  OMVS                    43       97     68.0

  ---------NUMBER OF WORK UNITS------------
  CPU TYPES              MIN      MAX      AVG

  CP                     444      888    555.5
  AAP                     22       33     28.8
  IIP                      0        0      0.0
```

```
-----------------------DISTRIBUTION OF IN-READY WORK UNIT QUEUE------------
NUMBER OF                0    10   20   30   40   50   60   70   80   90   100
WORK UNITS      (%)      |....|....|....|....|....|....|....|....|....|....|
<=  N           55.5     >>>>>>>>>>>>>>>>>>>>>>>>>>>>>>
 =  N +   1      4.4     >>>
 =  N +   2      4.0     >>>
 =  N +   3      3.7     >>
<=  N +   5      7.1     >>>>
<=  N +  10     14.7     >>>>>>>>
<=  N +  15      8.0     >>>>>
<=  N +  20      1.9     >
<=  N +  30      0.2     >
<=  N +  40      0.0
<=  N +  60      0.0
<=  N +  80      0.0
<=  N + 100      0.0
<=  N + 120      0.0
<=  N + 150      0.0
>   N + 150      0.0

N = NUMBER OF PROCESSORS ONLINE UNPARKED (22.4 ON AVG)
```

16 Buckets representing the work unit count with regard to the number of online processors

Work unit count on CPU type level

40

What I hope I covered.....

- What are dispatchable units of work on z/OS
- How WLM manages dispatchable units of work
- The role of HiperDispatch
- Dispatching work to zIIP and zAAP engines
- RMF Work Unit Analysis Report

IBM

Notice Regarding Specialty Engines (e.g., zIIPs, zAAPs and IFLs):

Any information contained in this document regarding Specialty Engines ("SEs") and SE eligible workloads provides only general descriptions of the types and portions of workloads that are eligible for execution on Specialty Engines (e.g., zIIPs, zAAPs, and IFLs). IBM authorizes customers to use IBM SEs only to execute the processing of Eligible Workloads of specific Programs expressly authorized by IBM as specified in the "Authorized Use Table for IBM Machines" provided at:
www.ibm.com/systems/support/machine_warranties/machine_code/aut.html ("AUT").

No other workload processing is authorized for execution on an SE.

IBM offers SEs at a lower price than General Processors/Central Processors because customers are authorized to use SEs only to process certain types and/or amounts of workloads as specified by IBM in the AUT.

SmarterComputing

The World of z/OS Dispatching on the zEC12 Processor

Glenn Anderson, IBM Lab Services and Training

Summer SHARE 2013
Session 14040